SMC

Clean Wet Series

High Purity Chemical Valve

Integral Fittings Series LVC

- N.C./N.O. with same configuration/Double acting
- Compatible with 100°C fluid temperature

Body material: New PFA

3 port added

Threaded Ports Series LVA

- Diaphragm material PTFE, EPR, NBR are selectable

Body material: New PFA/ Stainless steel/ PPS

3 port added

Manual Operation Series LVH

- Locking and non-locking types available
- Integral fitting type/Threaded type

Body material: New PFA/ Stainless steel/ PPS

Stable Sealing Surface
Guide ring

A unique guide ring on the piston rod eliminates lateral motion of the poppet, greatly increasing seal life and reducing particle formation with a stable work surface.

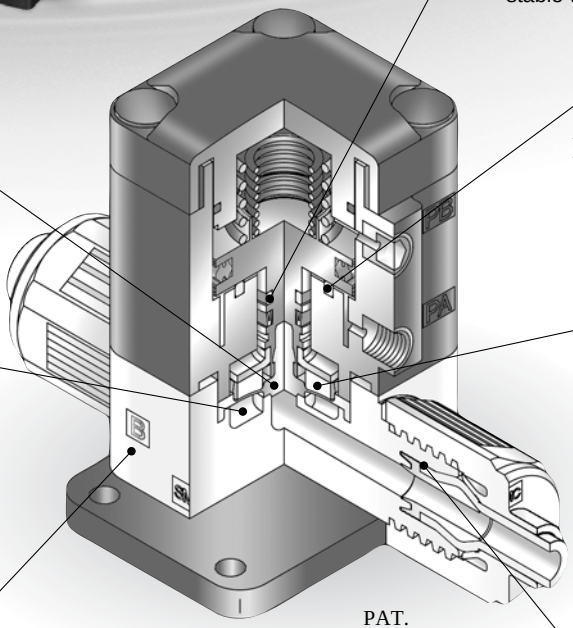

Low particle generation
Piston bumper

A bumper absorbs piston momentum to minimize impact-induced particles.

Prevents Micro-Bubbles Diaphragm (PTFE)

Special diaphragm construction insures gentle opening and closing that prevents the formation of micro-bubbles.

Minimal dead space

In addition to a body designed for smooth flow with minimal internal dead space, integral fittings eliminate the possibility of residual liquid in pipe threads.

Outstanding corrosion resistance Body (New PFA)

Compatible with chemicals such as acids, bases and ultra DI water.

Back-pressure resistance and long life Buffer

The diaphragm is supported by a buffer that minimizes deformation, which gives it long life and resistance to back-pressure.

PAT.

Different tubing sizes can be selected Hyper fitting

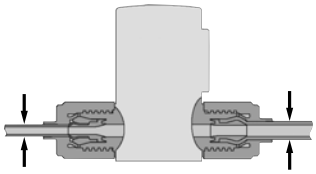

- No leak design (quadruple seal)
- Nut lock mechanism (sealing)
- High flexural strength (tubing supports)

Main applications and fields

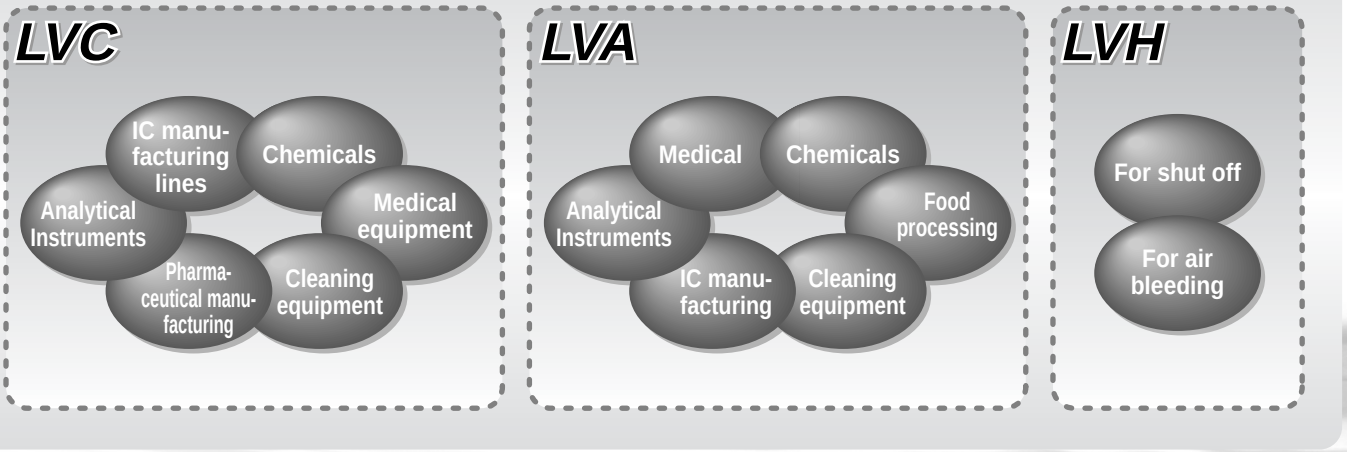

Air Operated
Integral Fitting Type Series LVC ▸▸▸▸▸▸▸▸▸▸▸▸▸▸▸▸▸▸▸▸▸▸▸▸▸▸▸▸▸▸ P. 1

Type	Symbol	Model	LVC2□	LVC3□	LVC4□	LVC5□	LVC6□
		Orifice diameter	ø4	ø8	ø10	ø16	ø22
		Tubing O.D. Metric	4, 6	6, 8, 10	10, 12	12, 19	19, 25
		Tubing O.D. Inch	1/8, 3/16, 1/4	1/4, 3/8	3/8, 1/2	1/2, 3/4	3/4, 1
		Valve type					
Basic type 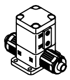	N.C. N.O. Double acting	N.C.	○	○	○	○	○
		N.O.	○	○	○	○	○
		Double acting	○	○	○	○	○
With flow rate adjustment 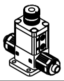	N.C. Double acting	N.C.	○	○	○	○	○
		Double acting	○	○	○	○	○
With by-pass 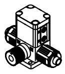	N.C. Double acting	N.C.	—	○	○	○	—
		Double acting	—	○	○	○	—
With flow rate adjustment & by-pass 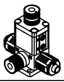	N.C. Double acting	N.C.	—	○	○	○	—
		Double acting	—	○	○	○	—
With indicator 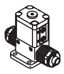	N.C.	N.C.	○	○	○	○	○
Suck back 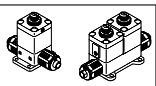	Single type Unit	Single type	○	—	—	—	—
		Unit	○	—	—	—	—
Manifold (5 stations max.) 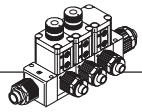							
3 port 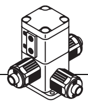	N.C.	N.C.	○	—	—	—	—

Air Operated
Threaded Type Series LVA ▸▸▸▸▸▸▸▸▸▸▸▸▸▸▸▸▸▸▸▸▸▸▸▸▸▸▸▸▸▸ P. 11

Type	Symbol	Model	LVA1□		LVA2□		LVA3□		LVA4□		LVA5□		LVA6□
		Orifice diameter	ø2		ø4		ø8		ø12		ø20		ø22
		Port size	1/8	1/4	1/8	1/4	1/4	3/8	3/8	1/2	1/2	3/4	1
		Body material Note 1) Stainless steel (SUS316)	○	○	○	○	○	○	○	○	○	○	○
		PPS	○	○	—	○	—	○	—	○	—	○	—
		PFA	—	—	—	○	—	○	—	○	—	○	○
		Valve type											
Basic type 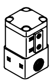	N.C. N.O. Double acting	N.C.	○	○	○	○	○	○	○	○	○	○	○
		N.C.	—	—	○	○	○	○	○	○	○	○	○
		N.O.	○	○	○	○	○	○	○	○	○	○	○
With flow rate adjustment 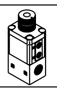	N.C. Double acting	Double acting	—	—	○	○	○	○	○	○	○	○	○
		Double acting	—	—	○	○	○	○	○	○	○	○	○
With by-pass 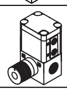	N.C. Double acting	N.C.	—	—	—	—	—	○	—	○	—	○	—
		Double acting	—	—	—	—	—	○	—	○	—	○	—
With flow rate adjustment & by-pass 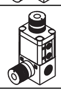	N.C. Double acting	N.C.	—	—	—	—	—	○	—	○	—	○	—
		Double acting	—	—	—	—	—	○	—	○	—	○	—
With indicator	N.C.	N.C.	—	—	○	○	○	○	○	○	○	○	○
Manifold (5 stations max.) 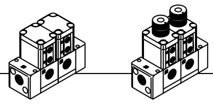													
3 port 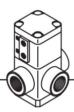	N.C.	N.C.	—	—	—	Note 2) ○	—	—	—	—	—	—	—

Note1) Refer to the page 11 for the applicable optional body materials.

Note2) Only PFA is applicable as a body material.

Manually Operated Series LVH P. 21

Integral Fitting Type

Type	Symbol	Model	LVH20	LVH30	LVH40
		Orifice diameter	ø4	ø8	ø10
		Tubing O.D. Metric	4, 6	6, 8, 10	10, 12
		Tubing O.D. Inch	1/8, 3/16, 1/4	1/4, 3/8	3/8, 1/2
Basic type 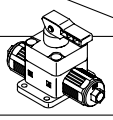	Non-locking / Locking	N.C.	○	○	○
Manifold (5 stations max.) 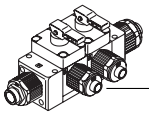					

Threaded Type

Type	Symbol	Model	LVH20				LVH30				LVH40			
		Orifice diameter	ø4				ø8				ø12			
		Material	SUS316		PPS	PFA	SUS316		PPS	PFA	SUS316		PPS	PFA
		Port size	1/8	1/4	1/4	1/4	1/4	3/8	3/8	3/8	3/8	1/2	1/2	1/2
Basic type 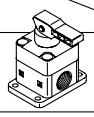	Non-locking / Locking	N.C.	○	○	○	○	○	○	○	○	○	○	○	○
Manifold (5 stations max.) 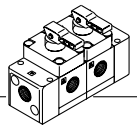														

Special Tools P. 29

Integral Fitting Type (Hyper Fittings)

Series LVC

How to Order Valves (Single Type)

LVC 2 0 – S 06 ☐ ☐ – ☐ ☐

Body class

Symbol	Body class	Orifice dia.
2	2	ø4
3	3	ø8
4	4	ø10
5	5	ø16
6	6	ø22

Valve type

0	N.C.
1	N.O.
2	Double acting

Note) Refer to variations in the table below for valve type combinations.

Option

Nil	None
1	With flow rate adjustment
2	With by-pass
3	With flow rate adjustment & by-pass
4	With indicator

Note) Refer to "Variations" in the table below for option combinations.
Options can not be combined each other.

Material

Symbol	Body	Actuator section: End plate	Dia-phragm	Applicable option: 1	2	3	4	Note
Nil	PFA	PPS	PTFE	●	●	●	●	–
F	PFA	PVDF	PTFE					Hydrofluoric acid compatible (Only LVC40, 50 type)
N	PFA	PPS	PTFE	●	●	●	●	Ammonium hydroxide compatible

Applicable tubing size

Symbol	Connecting tubing O.D.	Body class 2	3	4	5	6
Metric sizes						
04	ø4	●				
06	ø6	○	●			
08	ø8		●			
10	ø10		○	●		
12	ø12			○	●	
19	ø19				○	●
25	ø25					○
Inch sizes						
03	1/8	●				
05	3/16	●				
07	1/4	○	●			
11	3/8		○	●		
13	1/2			○	●	
19	3/4				○	●
25	1					○

○ Basic size ● With reducer

Port B (OUT) different dia. size

Symbol	Application
Nil	Ports A & B same size
Refer to the applicable tubing table to the left.	Different diameter tubings can be selected within the same body class.

Pilot port thread type

Symbol	Body class	Thread type
Nil	2	M5
	3, 4, 5, 6	Rc 1/8
N	3, 4, 5, 6	NPT 1/8

Variations

Type	Symbol	Model	LVC20	LVC30	LVC40	LVC50	LVC60
		Orifice diameter	ø4	ø8	ø10	ø16	ø22
		Tubing O.D. Metric	4, 6	6, 8, 10	10, 12	12, 19	19, 25
		Tubing O.D. Inch	1/8, 3/16, 1/4	1/4, 3/8	3/8, 1/2	1/2, 3/4	3/4, 1
Basic type 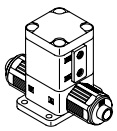	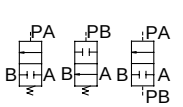 N.C. N.O. Double acting	N.C.	○	○	○	○	○
		N.O.	○	○	○	○	○
		Double acting	○	○	○	○	○
With flow rate adjust-ment 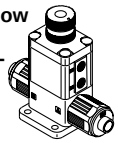	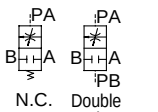 N.C. Double acting	N.C.	○	○	○	○	○
		Double acting	○	○	○	○	○
With by-pass 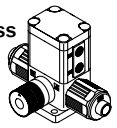	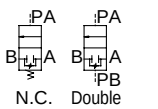 N.C. Double acting	N.C.	—	○	○	○	—
		Double acting	—	○	○	○	—
With flow rate adjust-ment & by-pass 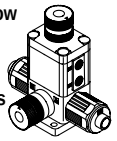	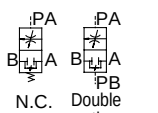 N.C. Double acting	N.C.	—	○	○	○	—
		Double acting	—	○	○	○	—
With indicator 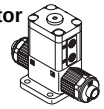	N.C.	N.C.	○	○	○	○	○

Standard Specifications

Model		LVC20	LVC30	LVC40	LVC50	LVC60
Tubing O.D.	Metric size	6	10	12	19	25
	Inch size	1/4	3/8	1/2	3/4	1
Orifice diameter		ø4	ø8	ø10	ø16	ø22
Flow characteristics	Av x 10^{-6}m²	8.4	40.8	60	144	192
	Cv	0.35	1.7	2.5	6	8
Withstand pressure (MPa)		1				
Operating pressure (MPa)		0 to 0.5			0 to 0.4	
Back pressure (MPa)	N.C./N.O.	0.3 or less			0.2 or less	
	Double acting	0.4 or less			0.3 or less	
Valve leakage (cm³/min)		0 (with water pressure)				
Pilot air pressure (MPa)		0.3 to 0.5				
Pilot port size		M5	Rc 1/8, NPT 1/8			
Fluid temperature (°C)		0 to 100				
Ambient temperature (°C)		0 to 60				
Weight (kg)		0.09	0.23	0.42	0.86	1.00

Note 1) Contact SMC if the valve is to be used with vacuum and B → A flow.

Different Diameter Tubing Applicable with Reducer

Different diameter tubing can be selected (within a body class) by using a nut and insert bushing (reducer).

● With reducer

Body class	Tubing O.D.													
	Metric sizes							Inch sizes						
	4	6	8	10	12	19	25	1/8	3/16	1/4	3/8	1/2	3/4	1
2	●	○	—	—	—	—	—	●	●	○	—	—	—	—
3	—	●	●	○	—	—	—	—	—	●	○	—	—	—
4	—	—	—	●	○	—	—	—	—	—	●	○	—	—
5	—	—	—	—	●	○	—	—	—	—	—	●	○	—
6	—	—	—	—	—	●	○	—	—	—	—	—	●	○

Note) Refer to page 29 for information on changing tubing sizes.

⚠ Specific Product Precautions

Be sure to read before handling. Refer to pages 35 through 37 for safety instructions and high purity chemical valve precautions.

Piping

⚠ Caution

1. Connect tubing with special tools.

Refer to pages 29 through 31 regarding tubing connection and special tools.

2. Tighten the nut to the end surface of the body. As a guide, refer to the proper tightening torques shown below.

Tightening torque for piping

Body class	Torque (Nm)
2	0.3 to 0.4
3	0.8 to 1.0
4	1.0 to 1.2
5	2.5 to 3.0
6	5.5 to 6.0

Suck Back

A change of volume inside the suck back valve pulls in liquid at the end of the nozzle to prevent dripping.

Single type

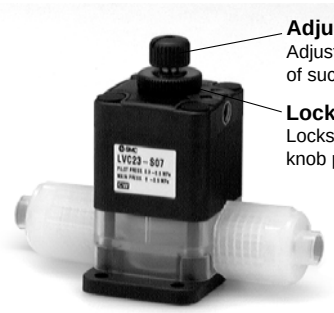

Symbol

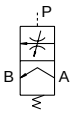

Unit type

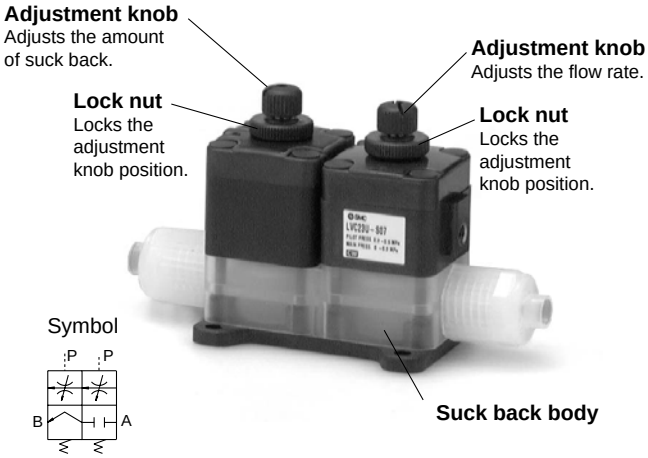

Symbol

Standard Specifications

Model		LVC23	LVC23U
Tubing O.D. Note 1)	Metric sizes	(4), 6	
	Inch sizes	(1/8), (3/16), 1/4	
Orifice diameter		—	ø3
Flow characteristics	Av x 10^{-6} m^2	—	4.8
	Cv	—	0.2
Withstand pressure (MPa)		1	
Operating pressure (MPa)		0 to 0.2	
Maximum suck back volume (cm^3)		0.1	
Pilot air pressure (MPa)		0.3 to 0.5	
Pilot port size		M5	
Fluid temperature (°C)		0 to 100	
Ambient temperature (°C)		0 to 60	
Weight (kg)		0.08	0.16

Note 1) Different diameter tubing shown in ( ) can be selected when used with a reducer. Refer to page 29 for details.

How to Order

LVC 2 3 ☐ – S 06 ☐

Body class

Symbol	Body class
2	2

Valve type

3	Suck back valve

Body type

Nil	Single type
U	Unit type with 2 way valve

Port B (OUT) different dia. size

Symbol	Application
Nil	Ports A & B same size
Refer to the applicable tubing in the table below.	Different diameter tubing can be selected within the same body class.

Applicable tubing size

Symbol	Connecting tubing O.D.	Body class 2
Metric sizes		
04	ø4	○
06	ø6	◎
Inch sizes		
03	1/8	○
05	3/16	○
07	1/4	◎

◎ Basic size ○ With reducer

Options

■ With flow rate adjustment

The flow rate is adjusted by controlling the diaphragm stroke.

■ With by-pass

A small amount of fluid from the inlet side is allowed to flow continuously to the outlet side by providing a by-pass inside the body.

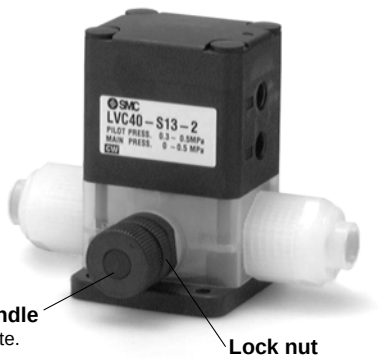

Construction

Standard type
N.C. type

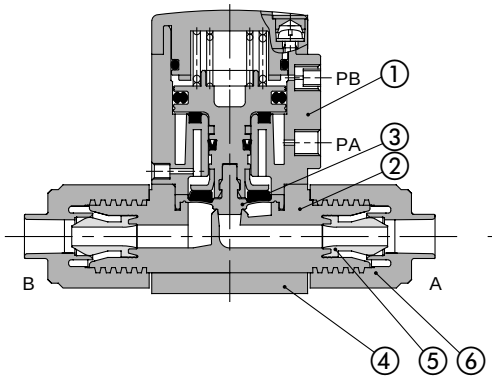

N.O. type

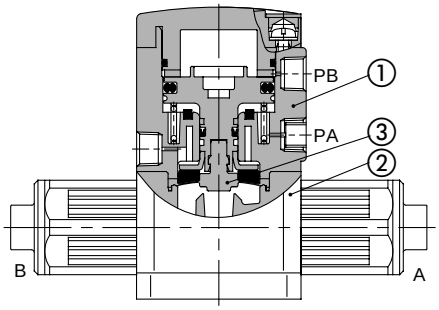

Double acting type

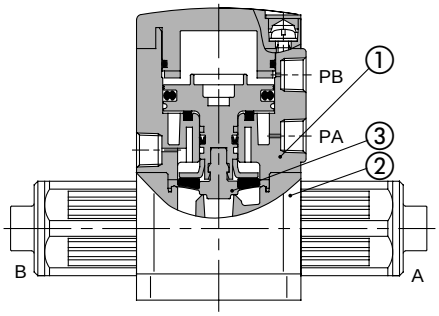

With reducer

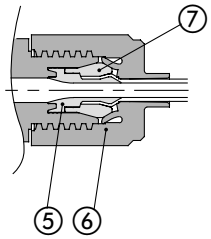

With flow rate adjustment

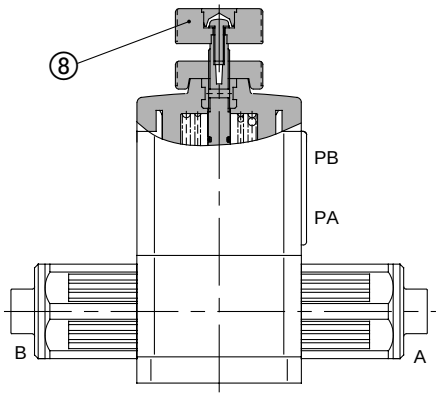

With by-pass

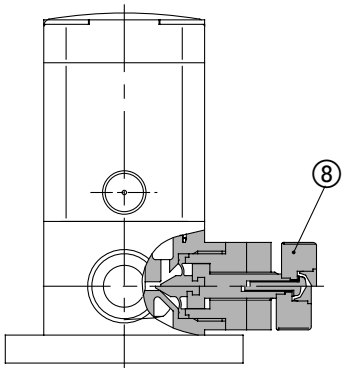

Suck back (single type)

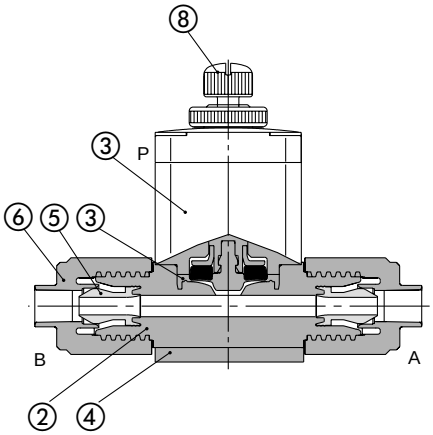

Suck back (unit type)

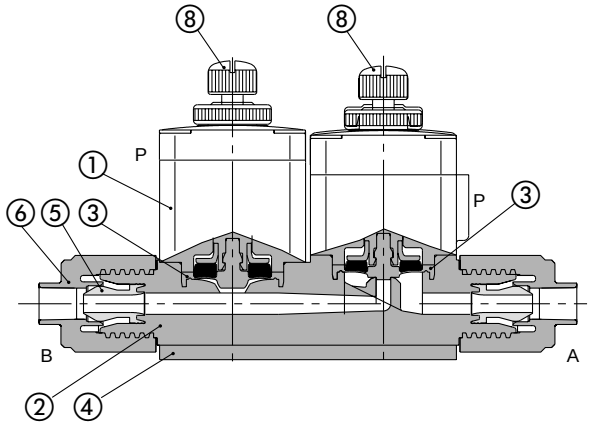

With indicator

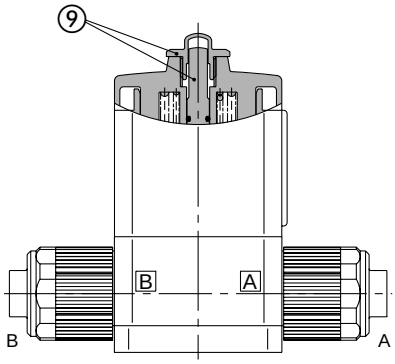

Parts list

No.	Description	Material	Option
1	**Actuator section**	PPS	PVDF
2	**Body**	PFA	—
3	**Diaphragm**	PTFE	—
4	**End plate**	PPS	PVDF
5	**Insert bushing**	PFA	—
6	**Nut**	PFA	—
7	**Collar**	PFA	—
8	**Flow rate adjuster section**	PPS	—
9	**Indicator**	PP	—

Dimensions

Basic type

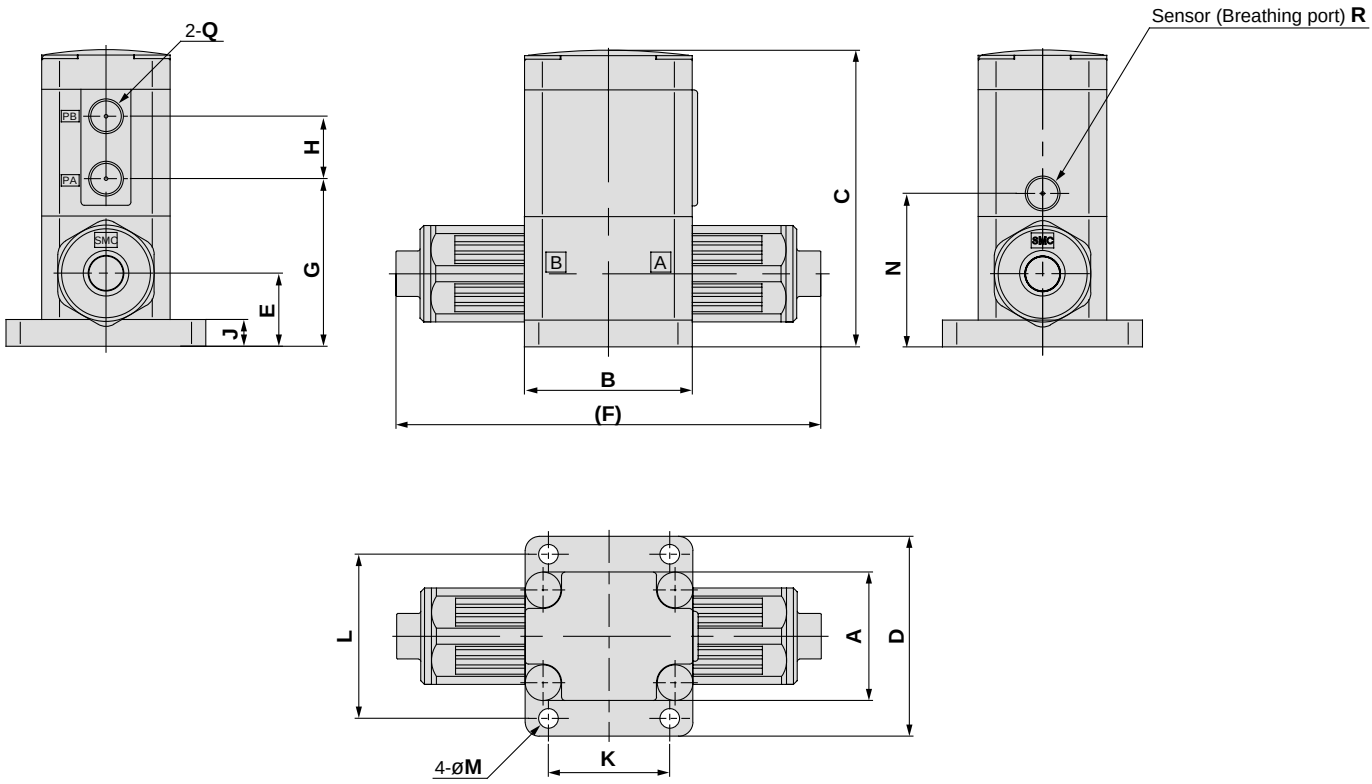

Dimensions

(mm)

Model	A	B	C	D	E	F	G	H	J	K	L	M	N	Q	R
LVC2□	30	30	54.5	44	11	79	28.5	13	4	20	37	3.5	23.5	M5	M3
LVC3□	36	47	79	56	16.5	106	43	17.5	7.5	34	46	5.5	39	Rc 1/8 NPT 1/8	Rc 1/8 NPT 1/8
LVC4□	46	60	96	68	22	131	55	18	8	42	57	5.5	48		
LVC5□	58	75	129	84	26	154	68	27.5	8	56	71	6.5	62		
LVC6□	58	75	138	84	32	165	77	27.5	8	56	71	6.5	71		

Dimensions

With flow rate adjustment

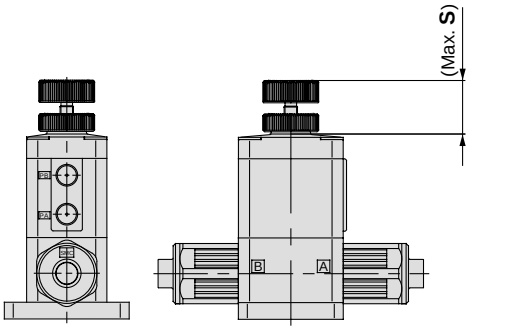

Dimensions (mm)

Model	S
LVC2□	11.5
LVC3□	24
LVC4□	29
LVC5□	34.5
LVC6□	36

With by-pass

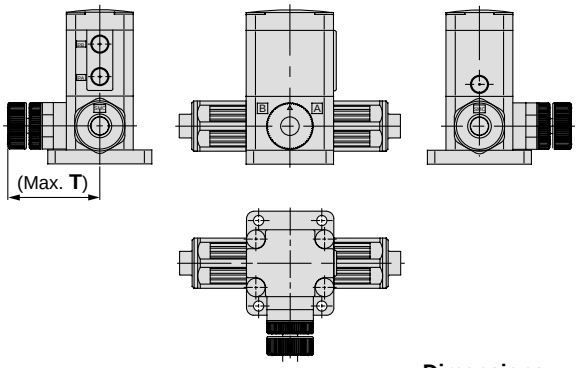

Dimensions (mm)

Model	T
LVC3□	49.5
LVC4□	54.5
LVC5□	60.5

With flow rate adjustment & by-pass

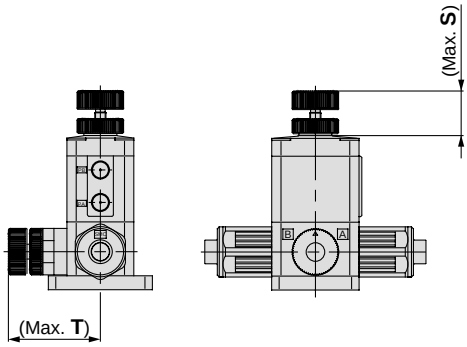

Dimensions (mm)

Model	S	T
LVC3□	24	49.5
LVC4□	29	54.5
LVC5□	34.5	60.5

With indicator

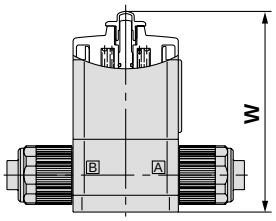

Dimensions (mm)

Model	W
LVC20	64
LVC30	90
LVC40	110.5
LVC50	147
LVC60	156

Suck back (Single type)

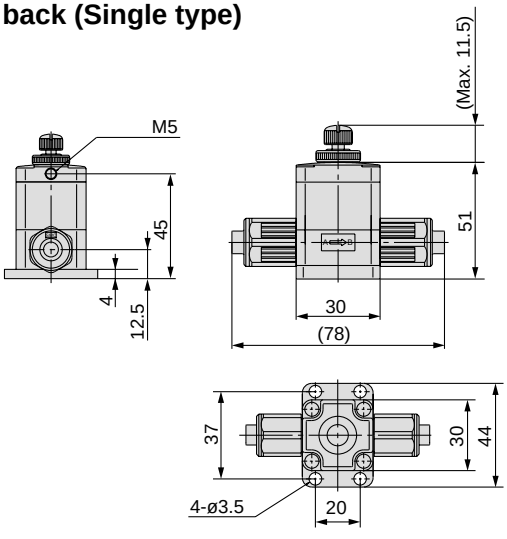

Suck back (Unit type)

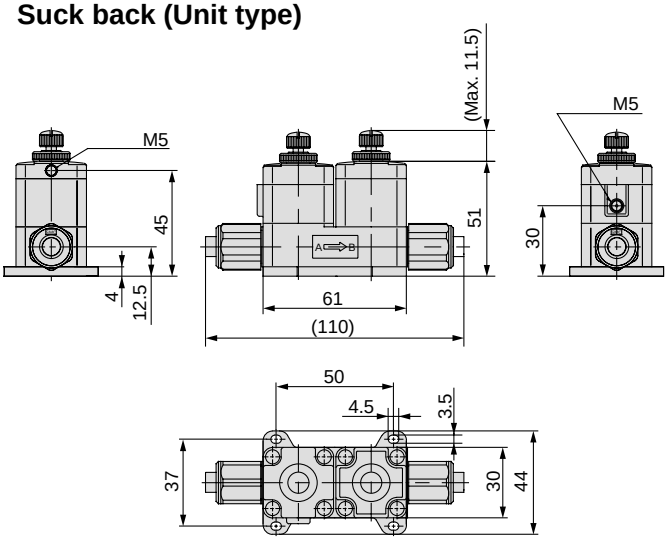

Series LVC
Manifolds

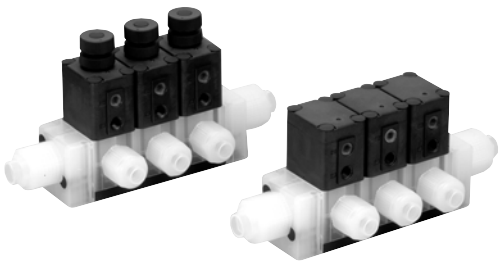

Manifold Specifications

Model	LLC2A	LLC3A	LLC4A	LLC5A
Manifold type	Stacking type			
P (IN), A (OUT) type	Common IN/Individual OUT			
Valve stations	2 to 5 stations			
Tubing size (port P)	3/8	1/2	3/4	3/4
Tubing size (port A)	1/4	3/8	1/2	3/4

Note 1) Contact SMC if the manifold will be used with vacuum and A → P flow.

How to Order Manifold Base

LLC 2 A – 02 – S 11 □

Body class

Symbol	Body class
2	2
3	3
4	4
5	5

Base type

A	Stacking type

Manifold stations

02	2 stations
⋮	⋮
05	5 stations

Tubing size for P port and L side connection

Symbol	Tubing size	Body class
00	Plug	2 to 5
06	Ø6	2
07	1/4"	
08	Ø8	
10	Ø10	
11	3/8"	
10	Ø10	3
11	3/8"	
12	Ø12	
13	1/2"	
12	Ø12	4
13	1/2"	
19	Ø19, 3/4"	
12	Ø12	5
13	1/2"	
19	Ø19, 3/4"	

Tubing size for P port and R side connection

Symbol	Tubing size	Body class
00	Plug	2 to 5
06	Ø6	2
07	1/4"	
08	Ø8	
10	Ø10	
11	3/8"	
10	Ø10	3
11	3/8"	
12	Ø12	
13	1/2"	
12	Ø12	4
13	1/2"	
19	Ø19, 3/4"	
12	Ø12	5
13	1/2"	
19	Ø19, 3/4"	

How to Order Valve

LVC 2 0 A – S07 □ – □ □

Body class

Symbol	Body class	Orifice dia.
2	2	ø4
3	3	ø8
4	4	ø12
5	5	ø20

Valve type

0	N.C.
1	N.O.
2	Double acting

Body type

A	Stacking type for manifold

Tubing size

Symbol	Tubing size	Body class
S03	1/8"	2
S04	ø4	
S05	3/16"	
S06	Ø6	
S07	1/4"	
S06	Ø6	3
S07	1/4"	
S08	Ø8	
S10	Ø10	
S11	3/8"	
S10	Ø10	4
S11	3/8"	
S12	Ø12	
S13	1/2"	
S12	Ø12	5
S13	1/2"	
S19	Ø19, 3/4"	

Option

Nil	None
1	With flow rate adjustment
4	With indicator

Note) Options can not be combined each other.

Material

Symbol	Body	Actuator section: End plate	Dia-phragm	Applicable option: 1	Applicable option: 4	Note
Nil	PFA	PPS	PTFE	●	●	–
F	PFA	PVDF	PTFE			Hydrofluoric acid compatible (Only LVC40, 50 type)
N	PFA	PPS	PTFE	●	●	Ammonium hydroxide compatible

Pilot port thread type

Symbol	Body class	Thread type
Nil	2	M5
	3/4/5	Rc 1/8
N	3/4/5	NP T1/8

How to Order Manifold Assembly (Example)

Enter the part number of the valves to be mounted together with the manifold base part number.

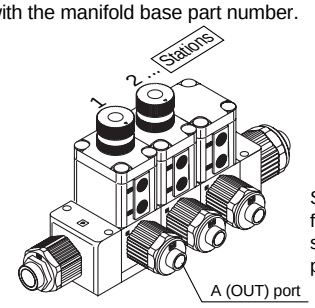

Stations are counted from station 1 on the left side, with the A (OUT) ports in front.

<Example>

LLC2A-03-S11 ····· 1set 1 set Manifold base part no.
∗ LVC20A-S07-1 ····· 2 sets 2 sets Valve part no. (stations 1 & 2)
∗ LVC20A-S07 ····· 1 set 1 set Valve part no. (station 3)

• Add the ∗ symbol at the beginning of part numbers for valves, etc. to be mounted.

Enter together in order counting from station 1 on the left side, with the A (OUT) ports in front.

Manifold variations

Type	Symbol	Model	LVC20A	LVC30A	LVC40A	LVC50A
		Manifold material	PFA			
		Tubing size	1/4	3/8	1/2	3/4
		Orifice diameter	ø4	ø8	ø10	ø16
Basic type	N.C.	N.C.	○	○	○	○
	N.O.	N.O.	○	○	○	○
	Double acting	Double acting	○	○	○	○
With flow rate adjustment	N.C.	N.C.	○	○	○	○
	Double acting	Double acting	○	○	○	○

Dimensions

LLC□A- Stations -□□-C

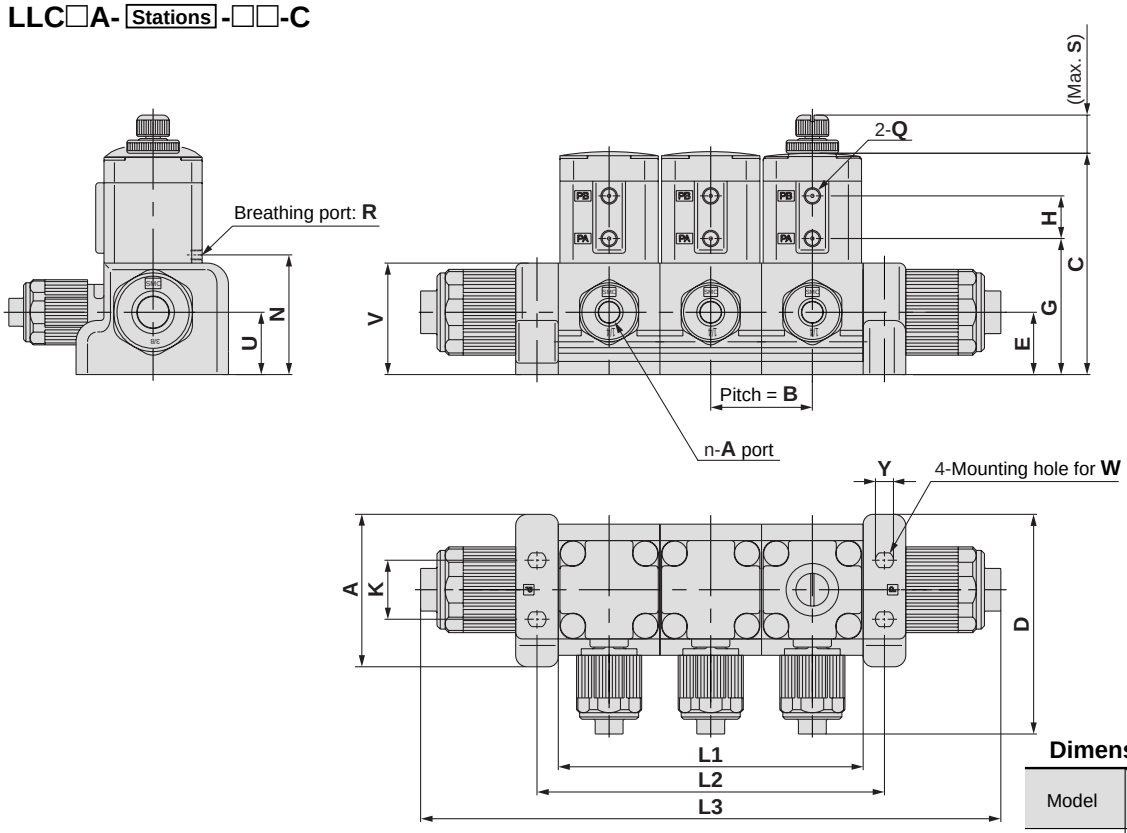

Dimensions (mm)

Model	A	B	C	D	E	G	H	K	N	Q	R	S	U	V	W	Y
LLC2A	46.5	31	67.5	67	19	41.5	13	18	36.5	M5	M3	11.5	19	34	M4	5.5
LLC3A	47	36.5	93.5	76	27.5	57.5	17.5	39	53.5	Rc 1/8 NPT 1/8	Rc 1/8 NPT 1/8	24	27.5	47	M5	6.5
LLC4A	60	47	111.5	95	33.5	70.5	18	50	63.5			29	33.5	56	M6	7.5
LLC5A	75	59	131	114	33.5	70	27.5	62	64			34.5	27.5	56.5	M6	7.5

Dimensions (mm)

Model	Station / Symbol	2	3	4	5
LLC2A	L1	62	93	124	155
	L2	75	106	137	168
	L3	146	177	208	239
LLC3A	L1	73	109.5	146	182.5
	L2	84	120.5	157	193.5
	L3	183	219.5	256	292.5
LLC4A	L1	94	141	188	235
	L2	109	156	203	250
	L3	219	266	313	360
LLC5A	L1	118	177	236	295
	L2	130	189	248	307
	L3	240	299	358	417

Series LVC
3 Port

Standard Specifications

Model		LVC200
Orifice diameter		ø4
Flow characteristics	Av x 10^{-6}m²	7.2
	Cv	0.3
Withstand pressure (MPa)		1
Operating pressure (MPa)		0 to 0.5
Valve leakage (cm³/min)		0 (with water pressure)
Pilot air pressure (MPa)		0.4 to 0.5
Pilot port size		M5
Fluid temperature (°C)		0 to 100
Ambient temperature (°C)		0 to 60
Weight (kg)		0.120

How to Order Valve

LVC 2 0 0 − S 07

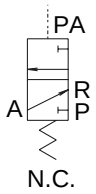

Body class

Symbol	Body class	Orifice dia.
2	2	ø4

Valve type

0	N.C

Applicable tubing size

Symbol	Connecting tubing O.D.	Body class 2
Metric sizes		
04	ø4	●
06	ø6	○
Inch sizes		
03	1/8	●
05	3/16	●
07	1/4	○

○ Basic size ● With reducer

Construction

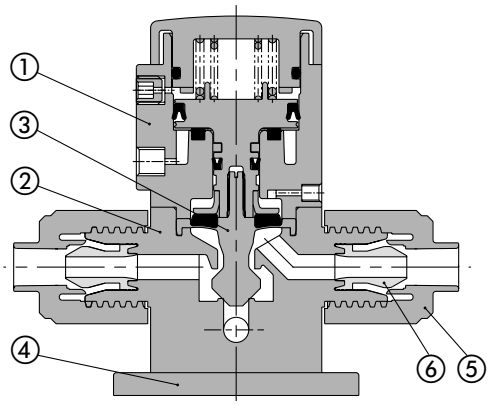

Parts list

No.	Description	Material
1	**Actuator section**	PPS
2	**Body**	PFA
3	**Diaphragm**	PTFE
4	**End plate**	PPS
5	**Nut**	PFA
6	**Insert bushing**	PFA

Dimensions

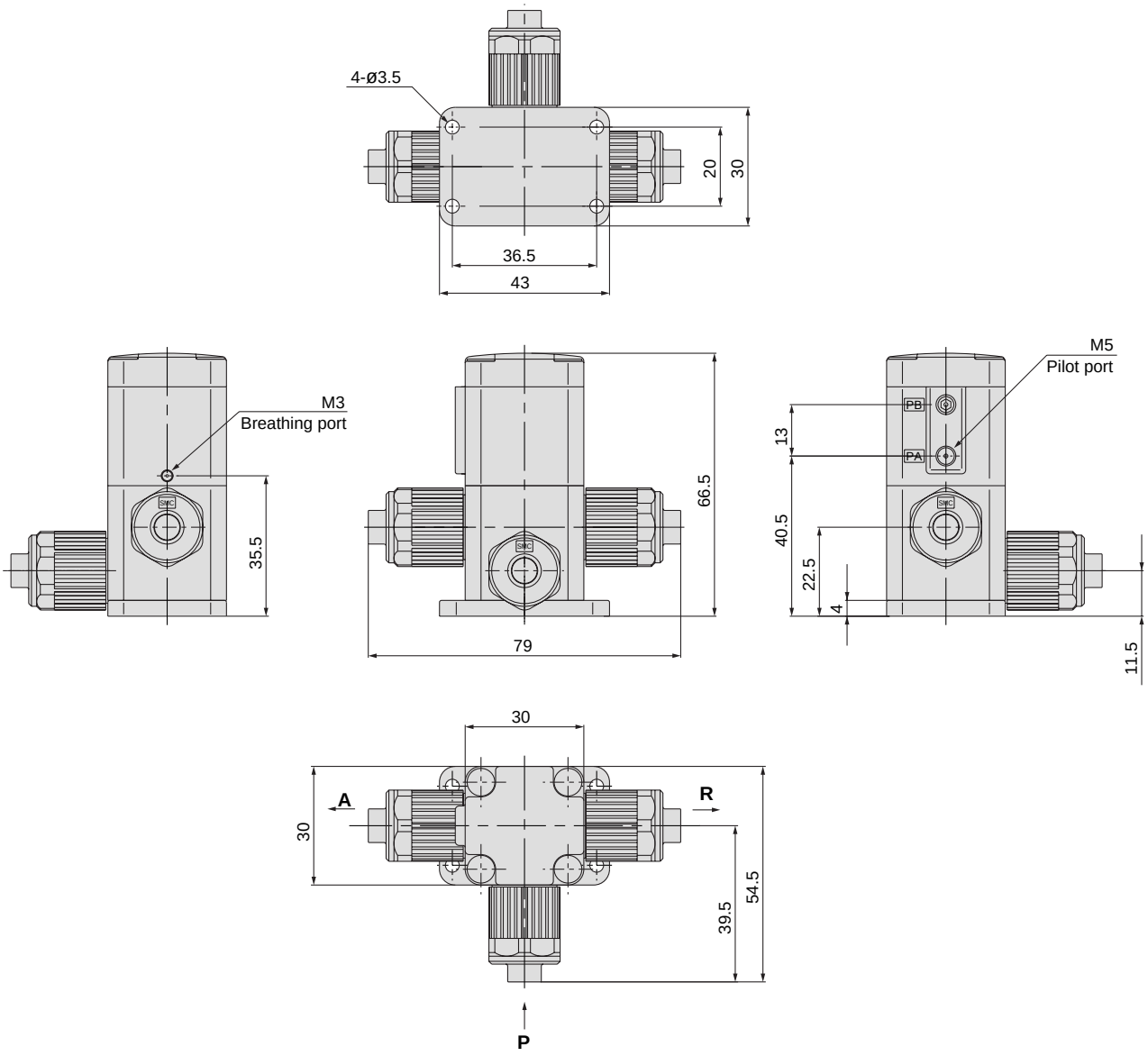
4-Ø3.5
20
30
36.5
43
M3
Breathing port
35.5
66.5
79
M5
Pilot port
PB
PA
13
40.5
22.5
4
11.5
30
A
R
30
39.5
54.5
P

Threaded Type

Series LVA

How to Order Valves (Single Type)

LVA [2] [0] – [02] [ ] – [A] [ ]

Body class

Symbol	Body class	Orifice dia
1	1	ø2
2	2	ø4
3	3	ø8
4	4	ø12
5	5	ø20
6	6	ø22

Valve type

0	N.C.
1	N.O.
2	Double acting

Note) Refer to "Variations" in the table below for valve type combinations.

Port size

Symbol	Port size	Body class
01	1/8	1
02	1/4	
01	1/8	2
02	1/4	
02	1/4	3
03	3/8	
03	3/8	4
04	1/2	
04	1/2	5
06	3/4	
10	1	6

Thread type

Symbol	Thread type
Nil	Rc
N	NPT

Option

Nil	None
1	With flow rate adjustment
2	With by-pass
3	With flow rate adjustment & by-pass
4	With indicator

Note) Refer to "Variations" in the table below for option combinations. Options can not be combined each other.

Material

Symbol	Body	Actuator section End plate	Dia-phragm	Applicable option 1	2	3	4	Note
A	Stainless steel	PPS / —	PTFE	●			●	—
B	PPS	PPS	PTFE	●			●	Except LVA60
C	PFA	PPS	PTFE	●	●	●	●	Except LVA10
D	Stainless steel	PPS / —	NBR	●			●	Except LVA60
E	Stainless steel	PPS / —	EPR	●			●	Except LVA60
F	PFA	PVDF	PTFE					Hydrofluoric acid compatible (Only LVA40, 50 type)
G	PPS	PPS	NBR	●			●	Except LVA60
H	PPS	PPS	EPR	●			●	Except LVA60
N	PFA	PPS	PTFE	●	●	●	●	Ammonium hydroxide compatible Except LVA10

Variations

Type	Symbol	Model	LVA10		LVA20		LVA30		LVA40		LVA50		LVA60
		Orifice diameter	ø2		ø4		ø8		ø12		ø20		ø22
		Body material Note 1) / Port size	1/8	1/4	1/8	1/4	1/4	3/8	3/8	1/2	1/2	3/4	1
		Stainless steel (SUS316)	○	○	○	○	○	○	○	○	○	○	○
		PPS	○	○	—	○	—	○	—	○	—	○	—
		PFA / Valve type	—	—	—	○	—	○	—	○	—	○	○
Basic type		N.C.	○	○	○	○	○	○	○	○	○	○	○
	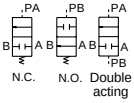 N.C. N.O. Double acting	N.O.	—	—	○	○	○	○	○	○	○	○	○
		Double acting	○	○	○	○	○	○	○	○	○	○	○
With flow rate adjustment	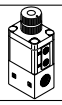	N.C.	—	—	○	○	○	○	○	○	○	○	○
	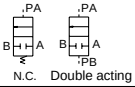 N.C. Double acting	Double acting	—	—	○	○	○	○	○	○	○	○	○
With by-pass		N.C.	—	—	—	—	—	○	—	○	—	○	—
	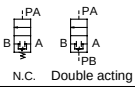 N.C. Double acting	Double acting	—	—	—	—	—	○	—	○	—	○	—
With flow rate adjustment & by-pass	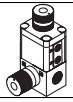	N.C.	—	—	—	—	—	○	—	○	—	○	—
	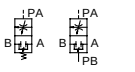 N.C. Double acting	Double acting	—	—	—	—	—	○	—	○	—	○	—
With indicator		N.C.	—	—	○	○	○	○	○	○	○	○	○
	N.C.												

Note) Refer to the "Material" table for the applicable optional body materials.

Basic type

With flow rate adjustment

Standard Specifications

Model		LVA10	LVA20	LVA30	LVA40	LVA50	LVA60
Orifice diameter		ø2	ø4	ø8	ø12	ø20	ø22
Port size		1/8, 1/4	1/8, 1/4	1/4, 3/8	3/8, 1/2	1/2, 3/4	1
Flow characteristics	Av x 10^{-6} m^2	1.7	8.4	40.8	79.2	144	192
	Cv	0.07	0.35	1.7	3.3	6	8
Withstand pressure (MPa)		1					
Operating pressure (MPa)		0 to 0.5				0 to 0.4	
Back pressure (MPa)	N.C./N.O. Note 2)	0.15 or less	0.3 or less			0.2 or less	
	Double acting	0.3 or less	0.4 or less			0.3 or less	
Valve leakage (cm^3/min)		0 (with water pressure)					
Pilot air pressure (MPa)		0.3 to 0.5					
Pilot port size		M5		Rc 1/8, NPT 1/8			
Fluid temperature (°C)		0 to 100 Note 1)					
Ambient temperature (°C)		0 to 60					
Weight (kg)	Stainless steel (SUS)	0.12	0.18	0.44	0.86	1.67	1.96
	PPS	0.05	0.08	0.18	0.32	0.73	—
	PFA	—	0.09	0.20	0.35	0.78	0.90

Note 1) 0 to 60°C when the diaphragm is NBR or EPR.
Note 2) The N.O. type is not available for LVA10.
Note 3) Contact SMC if the valve will be used with vacuum and B → A flow.

⚠ Specific Product Precautions

Be sure to read before handling. Refer to pages 35 through 37 for safety instructions and high purity chemical valve precautions.

Piping

⚠ Caution

1. Avoid using metal fittings with a resin body (taper threads).

This can cause damage to the valve body.

Options

■ With flow rate adjustment

Adjusts the flow rate by controlling the diaphragm stroke.

Adjustment knob
Adjusts the flow rate.

Lock nut
Locks the adjustment knob position.

Construction

Standard type
N.C. type

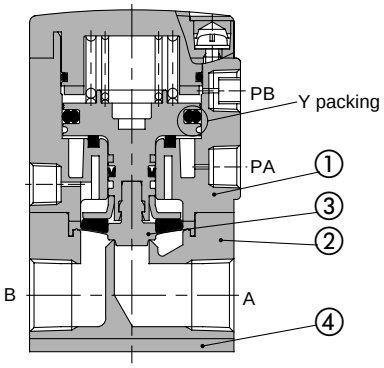

N.O. type

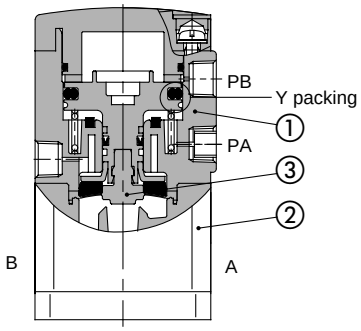

Double acting type

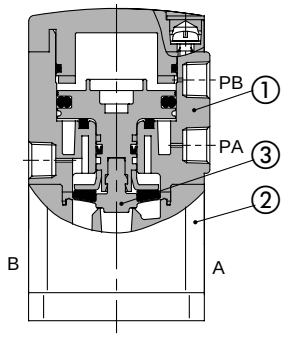

With flow rate adjustment

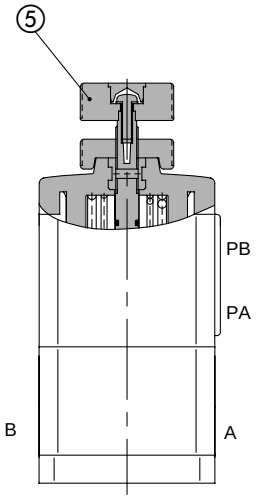

With indicator

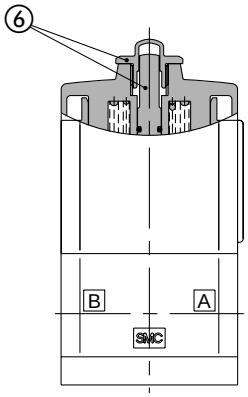

Parts list

No.	Description	Material	Option
1	**Actuator section**	PPS	PVDF
2	**Body**	Stainless steel	—
		PPS	
		PFA	
3	**Diaphragm**	PTFE	—
		NBR	
		EPR	
4	**End plate** (PFA body only)	PPS	PVDF
5	**Flow rate adjuster section**	PPS	—
6	**Indicator**	PP	—

Dimensions

Body material: Stainless steel

Basic type

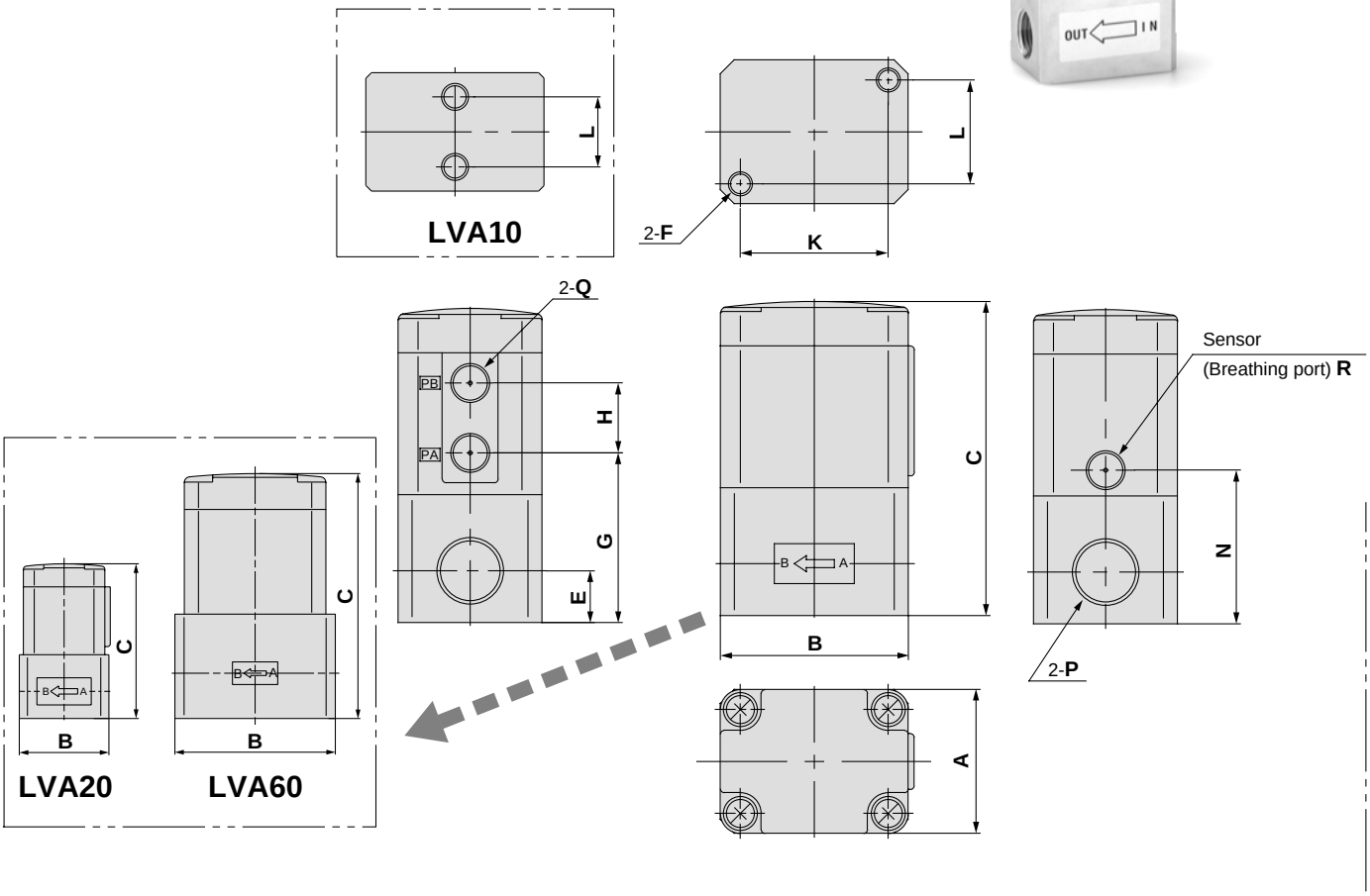

With flow rate adjustment

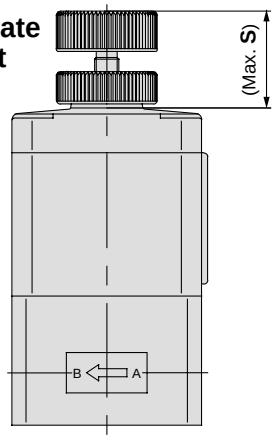

Dimensions (mm)

Model	S
LVA2□	11.5
LVA3□	24
LVA4□	29
LVA5□	34.5
LVA6□	36

With indicator

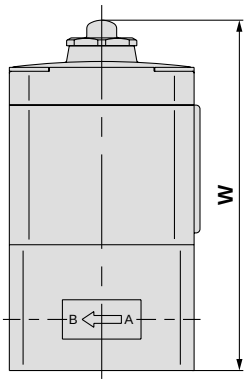

Dimensions (mm)

Model	W
LVA20	66.5
LVA30	89.5
LVA40	110
LVA50	140.5
LVA60	148

Dimensions (mm)

Model	A	B	C	E	F	G	H	K	L	N	P	Q	R
LVA1□	20	33	49.5	10	M5	27.5	11	—	13	27.5	Rc 1/8, 1/4 NPT 1/8, 1/4	M5	4.2
LVA2□	30	33	57	10	M5	31	13	22	22	26			M3
LVA3□	36	47	78.5	13	M6	42.5	17.5	37	26	38.5	Rc 1/4, 3/8 NPT 1/4, 3/8	Rc 1/8 NPT 1/8	Rc 1/8 NPT 1/8
LVA4□	46	60	95.5	16	M8	54.5	18	47.5	33.5	47.5	Rc 3/8, 1/2 NPT 3/8, 1/2		
LVA5□	58	75	122.5	19	M8	61.5	27.5	60	43	55.5	Rc 1/2, 3/4 NPT 1/2, 3/4		
LVA6□	58	85	130	24	M8	69	27.5	60	43	63	Rc 1 NPT 1		

Dimensions

Body material: PPS

Basic type

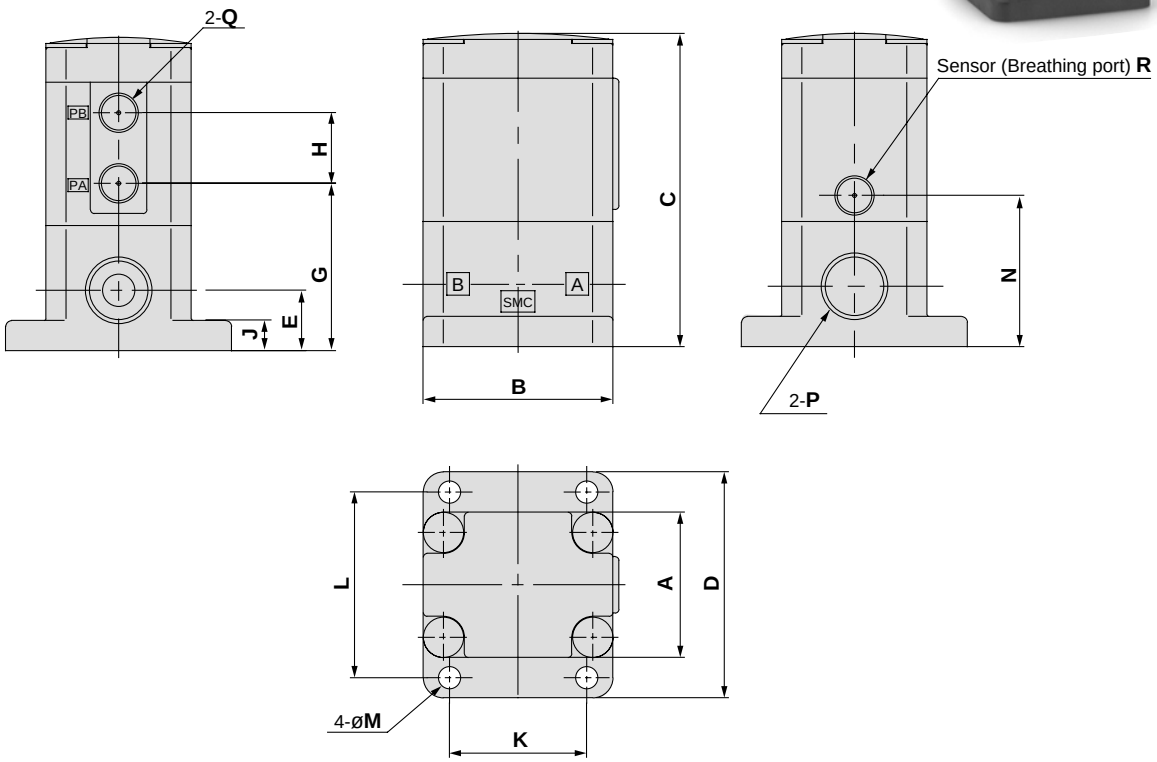

LVA10

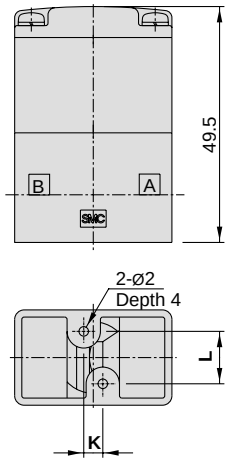

With flow rate adjustment

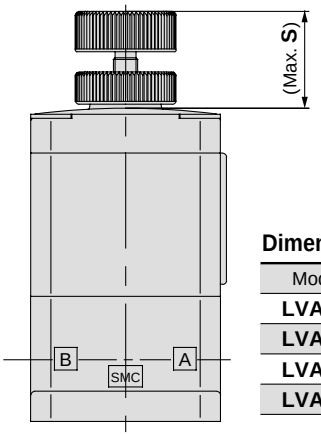

Dimensions (mm)

Model	S
LVA2□	11.5
LVA3□	24
LVA4□	29
LVA5□	34.5

With indicator

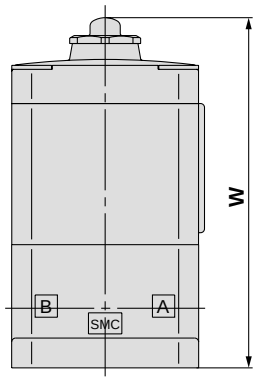

Dimensions (mm)

Model	W
LVA20	67
LVA30	88.5
LVA40	110.5
LVA50	147
LVA60	–

Dimensions (mm)

Model	A	B	C	D	E	G	H	J	K	L	M	N	P	Q	R
LVA1□	20	33	49.5	—	10	27.5	11	—	4	11	—	27.5	Rc 1/8, 1/4 NPT 1/8, 1/4	M5	4.2
LVA2□	30	36	57.5	44	11	31.5	13	4	20	37	3.5	26.5	Rc 1/4 NPT 1/4		M3
LVA3□	36	47	77.5	56	15	41.5	17.5	7.5	34	46	5.5	37.5	Rc 3/8 NPT 3/8	Rc 1/8 NPT 1/8	Rc 1/8 NPT 1/8
LVA4□	46	60	96	68	22	55	18	8	42	57	5.5	48	Rc 1/2 NPT 1/2		
LVA5□	58	75	129	84	26	68	27.5	8	56	71	6.5	62	Rc 3/4 NPT 3/4		

Dimensions

Body material: PFA

Basic type

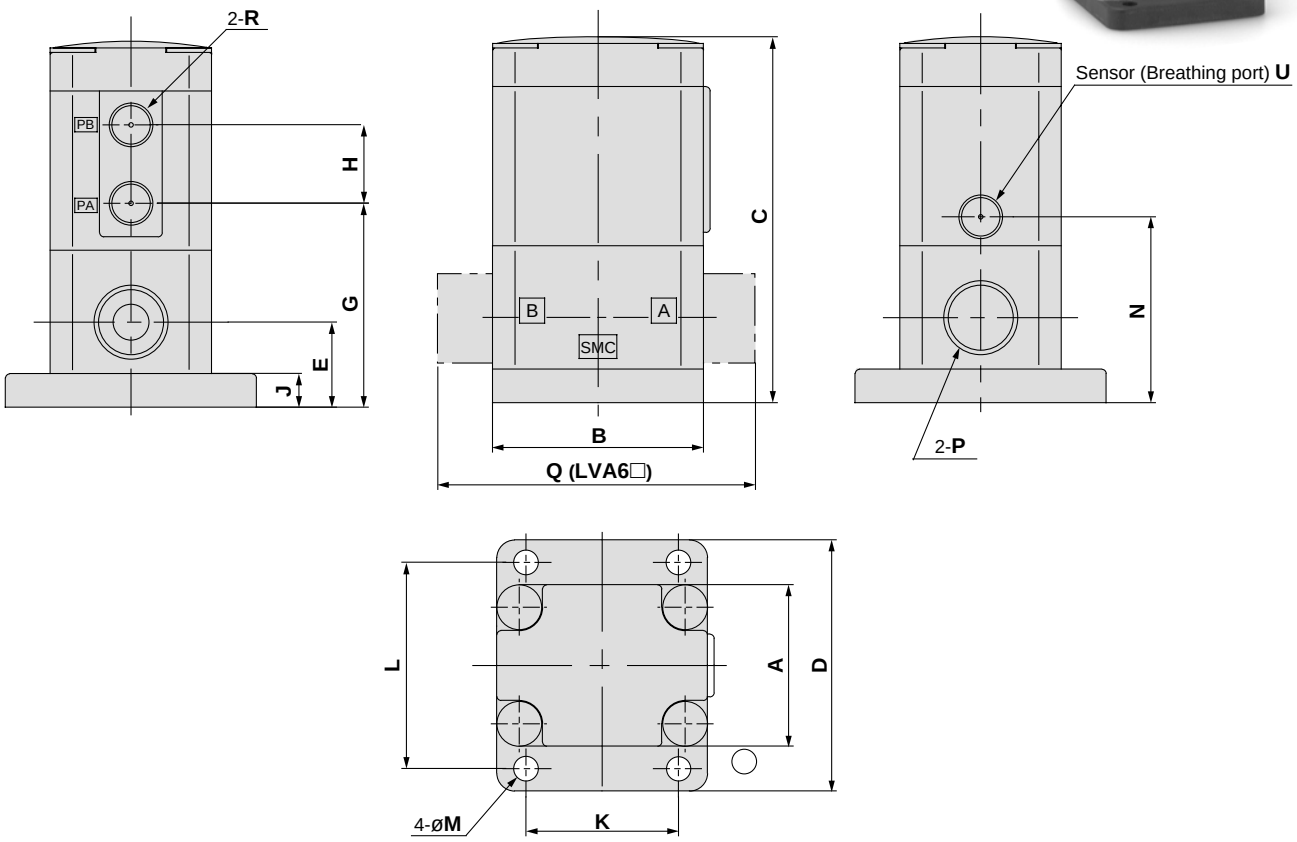

With flow rate adjustment

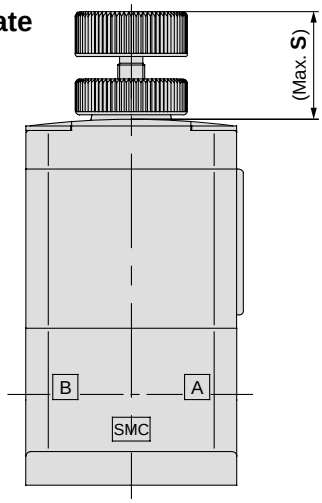

Dimensions (mm)

Model	S
LVA2□	11.5
LVA3□	24
LVA4□	29
LVA5□	34.5
LVA6□	36

With indicator

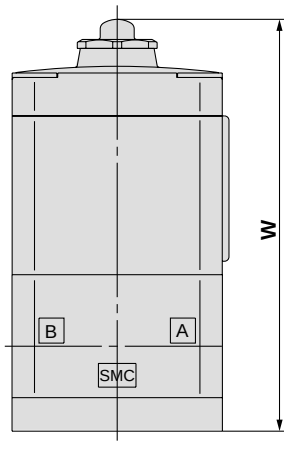

Dimensions (mm)

Model	W
LVA20	70.5
LVA30	92.5
LVA40	110.5
LVA50	147
LVA60	156

Dimensions (mm)

Model	A	B	C	D	E	G	H	J	K	L	M	N	P	Q	R	U
LVA2□	30	36	61	44	14.5	35	13	4	20	37	3.5	30	Rc 1/4 NPT 1/4	—	M5	M3
LVA3□	36	47	81.5	56	19	45.5	17.5	7.5	34	46	5.5	41.5	Rc 3/8 NPT 3/8	—	Rc 1/8 NPT 1/8	Rc 1/8 NPT 1/8
LVA4□	46	60	96	68	22	55	18	8	42	57	5.5	48	Rc 1/2 NPT 1/2	—		
LVA5□	58	75	129	84	26	68	27.5	8	56	71	6.5	62	Rc 3/4 NPT 3/4	—		
LVA6□	58	75	138	84	32	77	27.5	8	56	71	6.5	71	Rc 1 NPT 1	117		

Series LVA
Manifolds

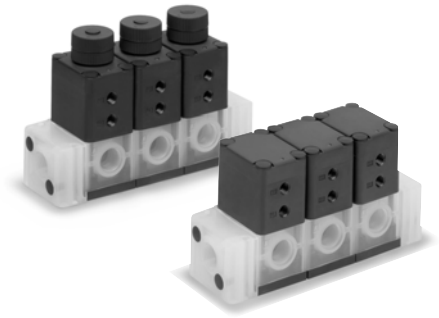

Manifold Specifications

Model	LLA2A	LLA3A	LLA4A	LLA5A
Manifold type	Stacking type			
P (IN), A (OUT) type	Common IN/Individual OUT			
Valve stations	2 to 5 stations			
Port size (port P)	1/4	3/8	1/2	3/4
Port size (port A)	1/4	3/8	1/2	3/4

Note 1) Contact SMC if the manifold will be used with vacuum and A → P flow.

How to Order Manifold Base

LLA 2 A – 05 – 02 □ – C

Body class

Symbol	Body class
2	2
3	3
4	4
5	5

Base type

A	Stacking type

Manifold stations

02	2 stations
⋮	⋮
05	5 stations

Thread type

Symbol	Thread type
Nil	Rc
N	NPT

Port size (port P)

Symbol	Port size	Body class
02	1/4	2
03	3/8	3
04	1/2	4
06	3/4	5

Material

Symbol	Manifold
C	PFA

How to Order Valve

LVA 2 0 A – 02 □ – C □

Body class

Symbol	Body class	Orifice dia.
2	2	ø4
3	3	ø8
4	4	ø12
5	5	ø20

Valve type

0	N.C.
1	N.O.
2	Double acting

Body type

A	Stacking type for manifold

Port size (port A)

Symbol	Port size	Body class
02	1/4	2
03	3/8	3
04	1/2	4
06	3/4	5

Thread type

Symbol	Thread type
Nil	Rc
N	NPT

Option

Nil	None
1	With flow rate adjustment
4	With indicator

Note) Options can not be combined each other.

Material

Symbol	Body	Actuator section: End plate	Diaphragm	Applicable option: 1	Applicable option: 4	Note
C	PFA	PPS	PTFE	●	●	—
F	PFA	PVDF	PTFE			Hydrofluoric acid compatible (Only LVA40, 50 type)
N	PFA	PPS	PTFE	●	●	Ammonium hydroxide compatible

How to Order Manifold Assembly (Example)

Enter the part number of the valves to be mounted together with the manifold base part number.

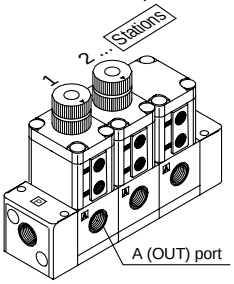

Stations are counted from station 1 on the left side, with the A (OUT) ports in front.

<Example>

LLA2A-03-02-C ····· 1 set — 1 set Manifold base part no.

∗ LVA20A-02-C1 ····· 2 sets — 2 sets Valve part no. (stations 1 & 2)

∗ LVA20A-02-C ····· 1 set — 1 set Valve part no. (station 3)

• Add the ∗ symbol at the beginning of part numbers for valves, etc. to be mounted.

Enter together in order counting from station 1 on the left side, with the A (OUT) ports in front.

Manifold variations

Type	Symbol		Model	LVA20A	LVA30A	LVA40A	LVA50A
			Manifold material	PFA			
			Port size	1/4	3/8	1/2	3/4
			Orifice diameter	ø4	ø8	ø12	ø20
Basic type	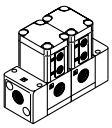	N.C. N.O. Double acting	N.C.	○	○	○	○
			N.O.	○	○	○	○
			Double acting	○	○	○	○
With flow rate adjustment	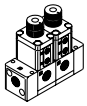	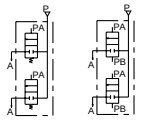 N.C. Double acting	N.C.	○	○	○	○
			Double acting	○	○	○	○

Dimensions

LLA□A- Stations -□□-C

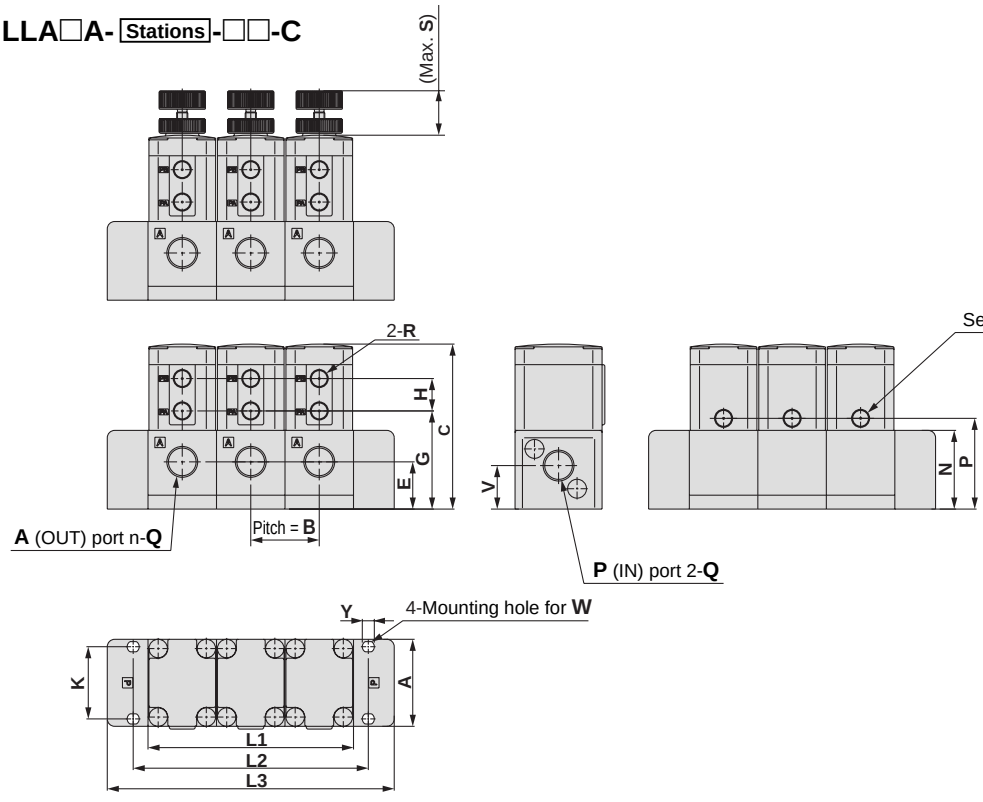

Dimensions (mm)

Model	S
LLA2A	11.5
LLA3A	24
LLA4A	29
LLA5A	34.5

(mm)

Model	Station / Symbol	2	3	4	5
LLA2A	L1	62	93	124	155
	L2	75	106	137	168
	L3	118	149	180	211
LLA3A	L1	74	111	148	185
	L2	90	127	164	201
	L3	118	155	192	229
LLA4A	L1	94	141	188	235
	L2	112	159	206	253
	L3	144	191	238	285
LLA5A	L1	118	177	236	295
	L2	140	199	258	317
	L3	178	237	296	355

Dimensions (mm)

Model	A	B	C	E	G	H	K	M	N	P	Q	R	U	V	W	Y
LLA2A	50	31	68	20.5	41.5	13	18	4.5	34	35	Rc 1/4, NPT 1/4	M5	M3	19	M4	5.5
LLA3A	47	37	88.5	25.5	52.5	17.5	39	5.5	42.5	51.5	Rc 3/8, NPT 3/8	Rc 1/8 NPT 1/8	Rc 1/8 NPT 1/8	23.5	M5	6.5
LLA4A	60	47	103.5	29	62.5	18	50	6.5	48	62.5	Rc 1/2, NPT 1/2			26	M6	7.5
LLA5A	75	59	135.5	32.5	74.5	27.5	61		61	68.5	Rc 3/4, NPT 3/4			29	M6	7.5

Series LVA
3 Port

Standard Specifications

Model		LVA200
Orifice diameter		ø4
Port size		1/4
Flow characteristics	Av x 10^{-6} m^2	7.2
	Cv	0.3
Withstand pressure (MPa)		1
Operating pressure (MPa)		0 to 0.5
Valve leakage (cm^3/min)		0 (with water pressure)
Pilot air pressure (MPa)		0.4 to 0.5
Pilot port size		M5
Fluid temperature (°C)		0 to 100
Ambient temperature (°C)		0 to 60
Weight (kg)		0.162

How to Order Valve

LVA 2 0 0 – 02 □ – C

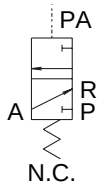

Body class

Symbol	Body class	Orifice dia.
2	2	ø4

Valve type

0	N.C

Thread type

Symbol	Thread type
Nil	Rc
N	NPT

Port size

Symbol	Port size
02	1/4

Material

Symbol	Body	Actuator section	Diaphragm
C	PFA	PPS	PTFE

Construction

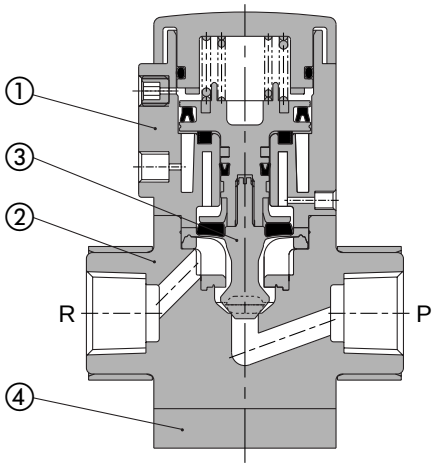

Parts list

No.	Description	Material
1	**Actuator section**	PPS
2	**Body**	PFA
3	**Diaphragm**	PTFE
4	**End plate**	Stainless steel

Dimensions

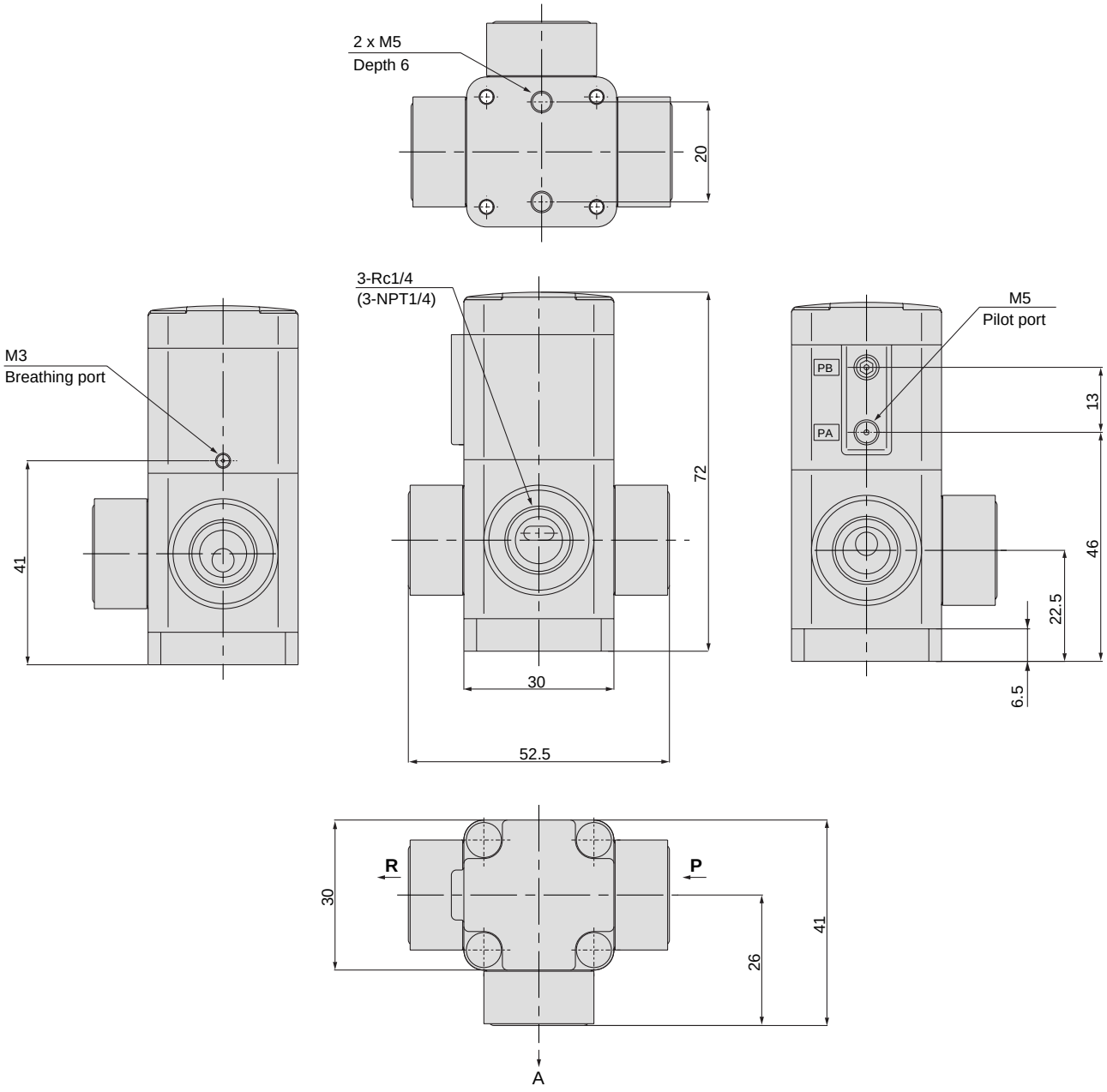
2 x M5
Depth 6
20
3-Rc1/4
(3-NPT1/4)
72
30
52.5
M3
Breathing port
41
M5
Pilot port
PB
PA
13
46
22.5
6.5
R
P
30
26
41
A

Manually Operated
Series LVH

How to Order Valve (Single Type)

Body class

Symbol	Body class	Orifice dia.
2	2	ø4
3	3	ø8
4	4	ø10

Integral fitting type **LVH 2 0 □ – S 06 □**

Threaded type **LVH 2 0 □ – 02 □ – A**

Port B (OUT) different dia. size

Symbol	Application
Nil	Ports A & B same size
Refer to the applicable tubing table to the right	Different diameter tubings can be selected within the same body class.

Applicable tubing size

Symbol	Connecting tubing O.D.	Body class 2	3	4
Metric sizes				
04	ø4	●		
06	ø6	○	●	
08	ø8		●	
10	ø10		○	●
12	ø12			○
Inch sizes				
03	1/8	●		
05	3/16	●		
07	1/4	○	●	
11	3/8		○	●
13	1/2			○

○ Basic size ● With reducer

Body class

Symbol	Body class	Orifice dia.
2	2	ø4
3	3	ø8
4	4	ø12

Valve type

0	N.C.

Material

Symbol	Body	Actuator section / End plate	Diaphragm
A	Stainless steel (SUS)	PP	PTFE
		—	
B	PPS	PP	PTFE
		PPS	
C	PFA	PP	PTFE
		PPS	

Lever operation

Symbol	Lever operation
Nil	Non-locking type (self-reset type)
L	Locking type

Port size

Symbol	Port size	Body class
01	1/8	2
02	1/4	
02	1/4	3
03	3/8	
03	3/8	4
04	1/2	

Pilot port thread type

Symbol	Thread type
Nil	Rc
N	NPT

Integral fitting type/Variations

Type	Symbol	Model	LVH20	LVH30	LVH40
		Orifice diameter	ø4	ø8	ø10
		Tubing O.D. / Metric	4, 6	6, 8, 10	10, 12
		Valve type / Inch	1/8, 3/16, 1/4	1/4, 3/8	3/8, 1/2
Basic type 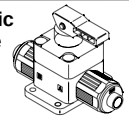	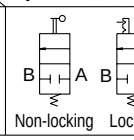 B A B A Non-locking Locking	N.C.	○	○	○

Threaded type/Series variation

Type	Symbol	Model	LVH20				LVH30				LVH40			
		Orifice diameter	ø4				ø8				ø12			
		Port size	1/8	1/4	1/4	1/4	1/4	3/8	3/8	3/8	3/8	1/2	1/2	1/2
		Material / Valve type	Stainless steel (SUS316)		PPS	PFA	Stainless steel (SUS316)		PPS	PFA	Stainless steel (SUS316)		PPS	PFA
Basic type 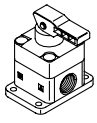	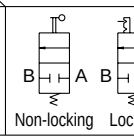 B A B A Non-locking Locking	N.C.	○	○	○	○	○	○	○	○	○	○	○	○

Standard Specifications/Integral Fitting Type

Model		LVH20	LVH30	LVH40
Tubing O.D.	Metric size	6	10	12
	Inch size	1/4	3/8	1/2
Orifice diameter		ø4	ø8	ø10
Flow characteristics	Av x 10^{-6}m²	8.4	40.8	60
	Cv	0.35	1.7	2.5
Withstand pressure (MPa)		1		
Operating pressure (MPa)		0 to 0.5		
Back pressure (MPa)		0.3 or less		
Valve leakage (cm³/min)		0 (with water pressure)		
Action		Toggle type (non-locking/locking)		
Fluid temperature (°C)		0 to 60		
Ambient temperature (°C)		0 to 60		
Weight (kg)		0.06	0.14	0.26

Note) Contact SMC if the valve is to be used with B → A flow.

⚠Specific Product Precautions

Be sure to read before handling. Refer to pages 35 through 37 for safety instructions and high purity chemical valve precautions.

Piping

⚠Caution

Integral fitting type

1. Connect tubing with special tools.

Refer to pages 29 through 31 regarding tubing connection and special tools.

2. Tighten the nut to the end surface of the body. As a guide, refer to the proper tightening torques shown below.

Tightening torque for piping

Body class	Torque (Nm)
2	0.3 to 0.4
3	0.8 to 1.0
4	1.0 to 1.2

Threaded type

1. Avoid using metal fittings with a resin body (taper threads).

This can cause damage to the valve body.

Different Diameter Tubing Applicable with Reducer

Different diameter tubing can be selected (within a body class) by using a nut and insert bushing (reducer).

● With reducer

Body class	Tubing O.D.									
	Metric sizes					Inch sizes				
	4	6	8	10	12	1/8	3/16	1/4	3/8	1/2
2	●	○	—	—	—	●	●	○	—	—
3	—	●	●	○	—	—	—	●	○	—
4	—	—	—	●	○	—	—	—	●	○

Note) Refer to page 29 for information on changing tubing sizes.

Standard Specifications/Threaded Type

Model		LVH20	LVH30	LVH40
Port size		1/8, 1/4	1/4, 3/8	3/8, 1/2
Orifice diameter		ø4	ø8	ø12
Flow characteristics	Av x 10^{-6}m²	8.4	40.8	60
	Cv	0.35	1.7	2.5
Withstand pressure (MPa)		1		
Operating pressure (MPa)		0 to 0.5		
Back pressure (MPa)		0.3 or less		
Valve leakage (cm³/min)		0 (with water pressure)		
Action		Toggle type (non-locking/locking)		
Fluid temperature (°C)		0 to 60		
Ambient temperature (°C)		0 to 60		
Weight (kg)	Stainless steel (SUS)	0.15	0.36	0.71
	PPS	0.04	0.09	0.17
	PFA	0.05	0.11	0.20

Construction

Integral fitting type

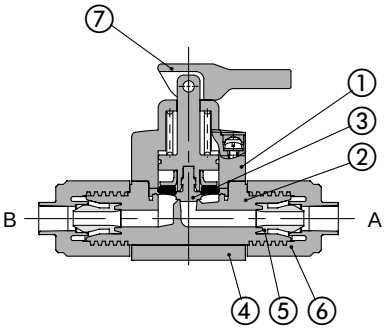

Threaded type

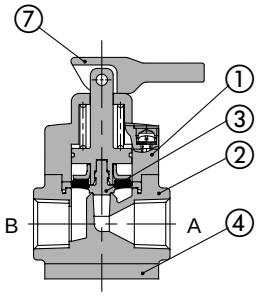

With reducer

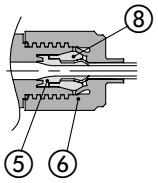

Parts list

No.	Description	Material	Note
1	**Actuator section**	PP	
2	**Body**	PFA	Integral fitting type
		Stainless steel	Threaded type
		PPS	
		PFA	
3	**Diaphragm**	PTFE	–
4	**End plate**	PPS	PFA body only
5	**Insert bushing**	PFA	–
6	**Nut**	PFA	–
7	**Lever**	PP	–
8	**Collar**	PFA	–

Dimensions/Integral Fitting Type

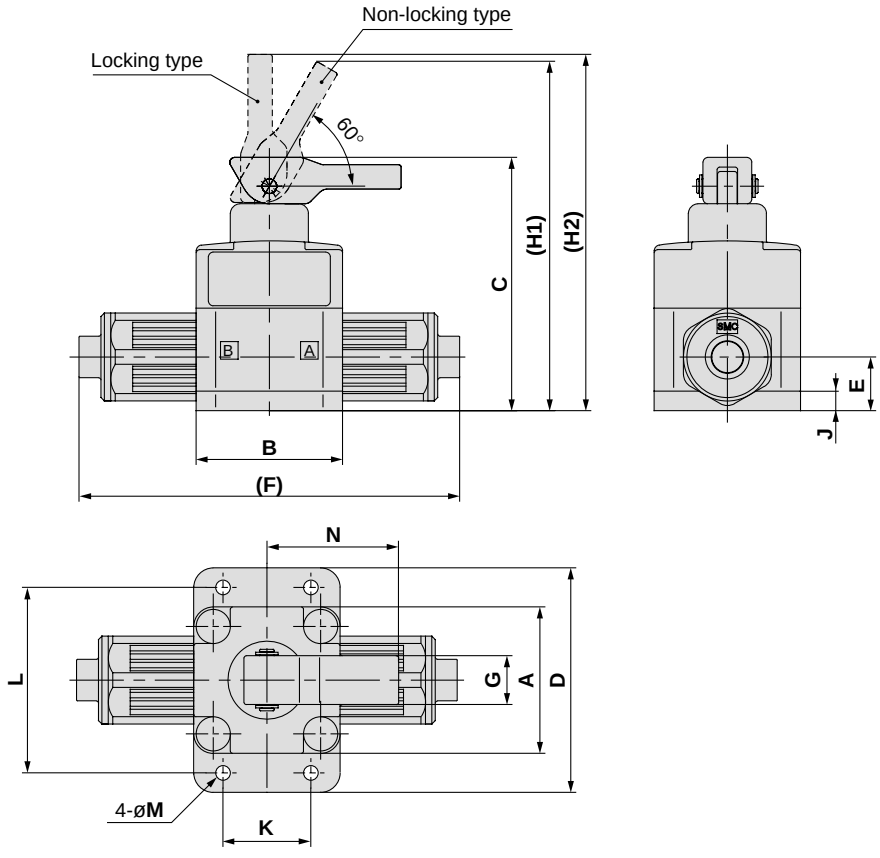

Dimensions

(mm)

Model	A	B	C	D	E	F	G	H1	H2	J	K	L	M	N
LVH20□	30	30	52	44	11	79	10	72.5	74	4	20	37	3.5	27
LVH30□	36	47	81.5	56	16.5	106	19	111	113	7.5	34	46	5.5	37.5
LVH40□	46	60	100	68	22.5	131	20.5	139	143	8	42	57	5.5	50

Dimensions/Threaded Type

Body material: Stainless steel

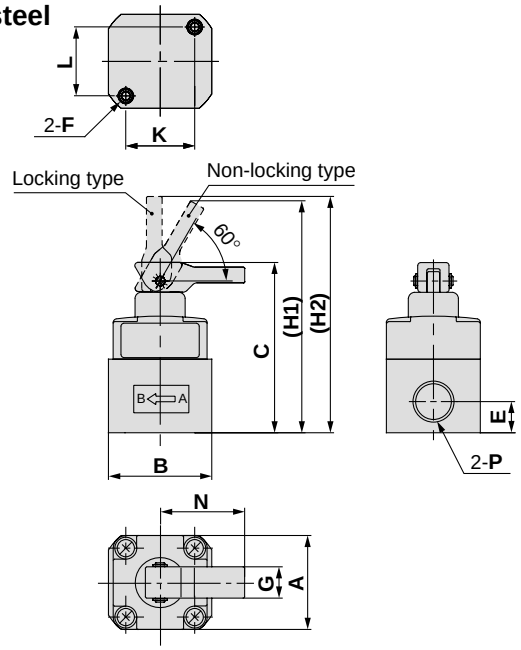

Body material: PPS

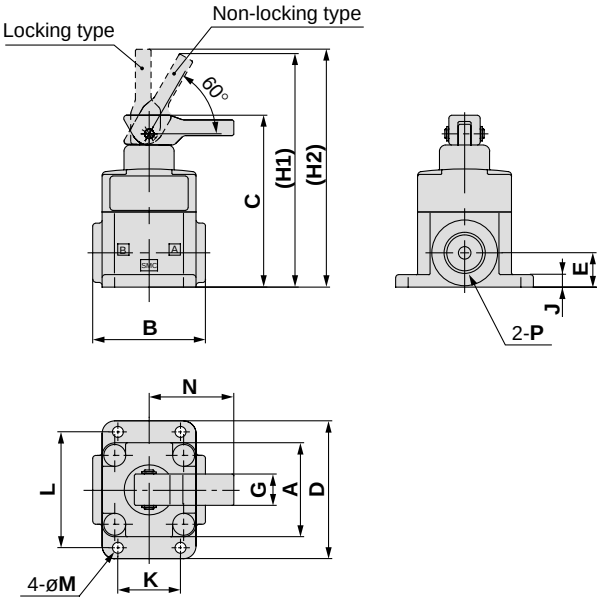

Body material: PFA

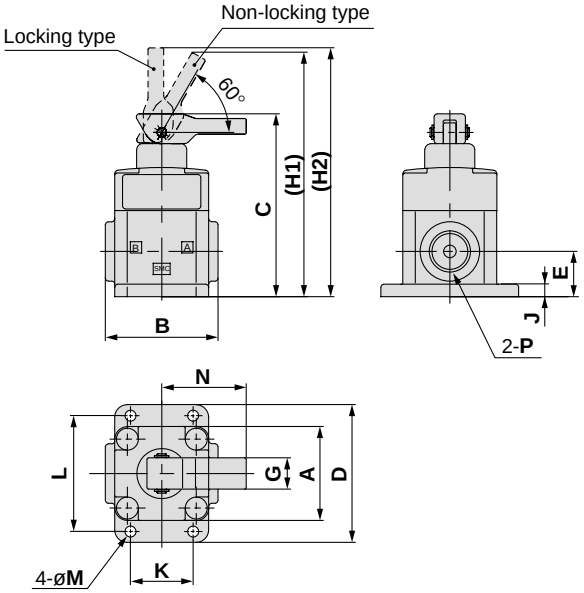

Dimensions (mm)

Body material	Model	A	B	C	D	E	F	G	H1	H2	J	K	L	M	N	P
Stainless steel (SUS)	**LVH20□**	30	33	54.5	—	10	M5	10	75	76.5	—	22	22	—	27	Rc 1/8, 1/4, NPT 1/8, 1/4
	LVH30□	36	47	81	—	13	M6	19	110.5	112.5	—	37	26	—	37	Rc 1/4, 3/8, NPT 1/4, 3/8
	LVH40□	46	60	99	—	16	M8	20.5	138	142	—	47.5	33.5	—	50	Rc 3/8, 1/2, NPT 3/8, 1/2
PPS	**LVH20□**	30	36	55	44	11	—	10	75.5	77	4	20	37	3.5	27	Rc 1/4, NPT 1/4
	LVH30□	36	47	80	56	15	—	19	109.5	111.5	7.5	34	46	5.5	37	Rc 3/8, NPT 3/8
	LVH40□	46	60	99.5	68	22	—	20.5	138.5	142.5	8	42	57	5.5	50	Rc 1/2, NPT 1/2
PFA	**LVH20□**	30	36	58.5	44	14.5	—	10	79	80.5	4	20	37	3.5	27	Rc 1/4, NPT 1/4
	LVH30□	36	47	84	56	19	—	19	113.5	115.5	7.5	34	46	5.5	37	Rc 3/8, NPT 3/8
	LVH40□	46	60	99.5	68	22	—	20.5	138.5	142.5	8	42	57	5.5	50	Rc 1/2, NPT 1/2

Series LVH/Integral Fitting Type
Manifolds

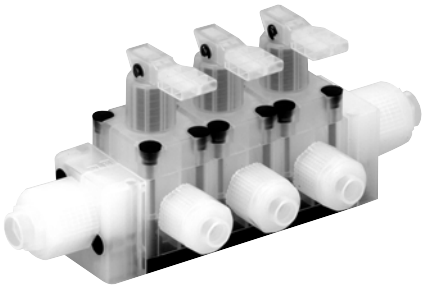

Manifold Specifications

Model	LLH2A	LLH3A	LLH4A
Manifold type	Stacking type		
P (IN), A (OUT) type	Common IN/Individual OUT		
Valve stations	2 to 5 stations		
Tubing size (port P)	3/8	1/2	3/4
Tubing size (port A)	1/4	3/8	1/2

Note 1) Contact SMC if the manifold will be used with vacuum and A → P flow.

How to Order Manifold Base

LLH 2 A – 05 – S 11 □

Body class

Symbol	Body class
2	2
3	3
4	4

Base type

A	Stacking type

Manifold stations

02	2 stations
⋮	⋮
05	5 stations

Tubing size for port P and L side connection

Symbol	Tubing size	Body class
00	Plug	2
06	ø6	
07	1/4"	
08	ø8	
10	ø10	
11	3/8"	
10	ø10	3
11	3/8"	
12	ø12	
13	1/2"	
12	ø12	4
13	1/2"	
19	ø19, 3/4"	

Tubing size for port P and R side connection

Symbol	Tubing size	Body class
00	Plug	2
06	ø6	
07	1/4"	
08	ø8	
10	ø10	
11	3/8"	
10	ø10	3
11	3/8"	
12	ø12	
13	1/2"	
12	ø12	4
13	1/2"	
19	ø19, 3/4"	

How to Order Valve

LVH 2 0 A □ – S07

Body class

Symbol	Body class	Orifice dia.
2	2	ø4
3	3	ø8
4	4	ø12

Valve type

0	N.C.

Body type

A	Stacking type for manifold

Lever operation

Symbol	Lever operation
Nil	Non-locking type (self-reset type)
L	Locking type

Tubing size

Symbol	Tubing size	Body class
S03	1/8"	2
S04	ø4	
S05	3/16"	
S06	ø6	
S07	1/4"	
S06	ø6	3
S07	1/4"	
S08	ø8	
S10	ø10	
S11	3/8"	
S10	ø10	4
S11	3/8"	
S12	ø12	
S13	1/2"	

How to Order Manifold Assembly (Example)

Enter the part number of the valves to be mounted together with the manifold base part number.

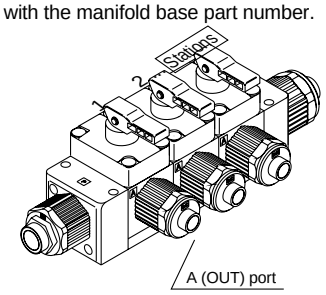

Stations are counted from station 1 on the left side, with the A (OUT) ports in front.

<Example>

LLH2A-03-SH ····· 1 set — 1 set Manifold base part no.

∗ LVH20A-S07 ····· 2 sets — 2 sets Valve part no. (stations 1 & 2)

∗ LVH20AL-S07 ····· 1 set — 1 set Valve part no. (station 3)

• Add the ∗ symbol at the beginning of part numbers for valves, etc. to be mounted.

Enter together in order counting from station 1 on the left side, with the A (OUT) ports in front.

Threaded type manifold/Variations

Type / Symbol	Model	LVH20	LVH30	LVH40
	Manifold material	PFA		
	Tubing size	1/4	3/8	1/2
	Orifice diameter	ø4	ø8	ø10
	Valve type			
Manifold 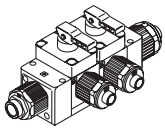	N.C. (Non-locking / Locking)	○	○	○

Dimensions

LLH□A- Stations -□□

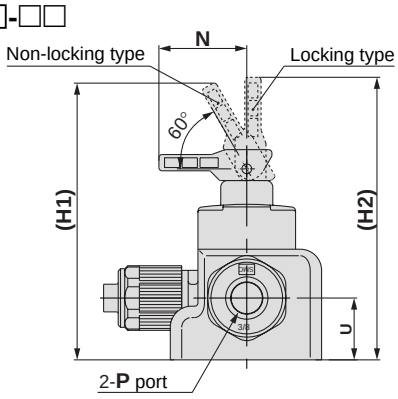

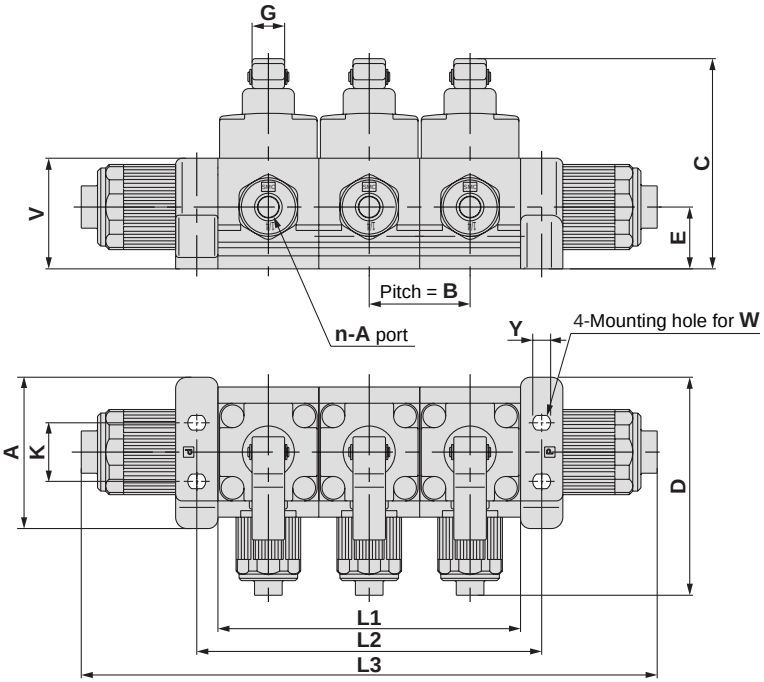

Dimensions (mm)

Model	A	B	C	D	E	G	H1	H2	K	N	U	V	W	Y
LLH2A	46.5	31	65	67	19	10	85.5	87	18	27	19	34	M4	5.5
LLH3A	47	36.5	94.5	76	27.5	19	125.5	127.5	39	37	27.5	47	M5	6.5
LLH4A	60	47	115	95	33.5	20.5	154	158	50	50	33.5	56	M6	7.5

(mm)

Model	Station / Symbol	2	3	4	5
LLH2A	**L1**	62	93	124	155
	L2	75	106	137	168
	L3	146	177	208	239
LLH3A	**L1**	73	109.5	146	182.5
	L2	84	120.5	157	193.5
	L3	183	219.5	256	292.5
LLH4A	**L1**	94	141	188	235
	L2	109	156	203	250
	L3	219	266	313	360

(mm)

Series LVH/Threaded Type
Manifolds

Manifold Specifications

Model	LLH2A	LLH3A	LLH4A
Manifold type	Stacking type		
P (IN), A (OUT) type	Common IN/Individual OUT		
Valve stations	2 to 5 stations		
Port size (port P)	1/4	3/8	1/2
Port size (port A)	1/4	3/8	1/2

Note 1) Contact SMC if the manifold will be used with vacuum and flow A → P.

How to Order Manifold Base

LLH 2 A – 05 – 02 ☐ – C

Body class

Symbol	Body class
2	2
3	3
4	4

Base type

A	Stacking type

Manifold stations

02	2 stations
⋮	⋮
05	5 stations

Port size (port P)

Symbol	Port size	Body class
02	1/4	2
03	3/8	3
04	1/2	4

Thread type

Symbol	Thread type
Nil	Rc
N	NPT

Material

Symbol	Manifold
C	PFA

How to Order Valve

Threaded type **LVH 2 0 A ☐ – 02 ☐ – C**

Body class

Symbol	Body class	Orifice dia.
2	2	ø4
3	3	ø8
4	4	ø12

Valve type

0	N.C.

Body type

A	Stacking type for manifold

Lever operation

Symbol	Lever operation
Nil	Non-locking type (self-reset type)
L	Locking type

Port size (port A)

Symbol	Port size	Body class
02	1/4	2
03	3/8	3
04	1/2	4

Thread type

Symbol	Thread type
Nil	Rc
N	NPT

Material

Symbol	Body	Actuator section / End plate	Diaphragm
C	PFA	PP	PTFE
		PPS	

How to Order Manifold Assembly (Example)

Enter the part number of the valves to be mounted together with the manifold base part number.

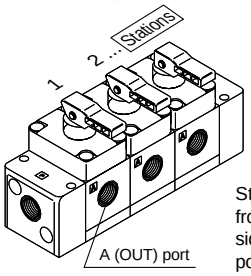

Stations are counted from station 1 on the left side, with the A (OUT) ports in front.

<Example>

LLH2A-03-02-C ····· 1 set 1 set Manifold base part no.
∗ LVH20A-02-C ····· 2 sets 2 sets Valve part no. (stations 1 & 2)
∗ LVH20AL-02-C ····· 1 set 1 set Valve part no. (station 3)

Add the ∗ symbol at the beginning of part numbers for valves, etc. to be mounted.

Enter together in order counting from station 1 on the left side, with the A (OUT) ports in front.

Threaded type manifold/Variations

Type	Symbol	Model	LVH20	LVH30	LVH40
		Manifold material	PFA		
		Port size	1/4	3/8	1/2
		Orifice diameter	ø4	ø8	ø12
		Valve type			
Manifold 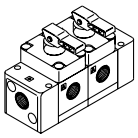	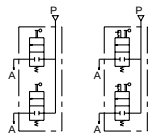 Non-locking Locking	N.C.	○	○	○

Dimensions

LLH□A- Stations -□□-C

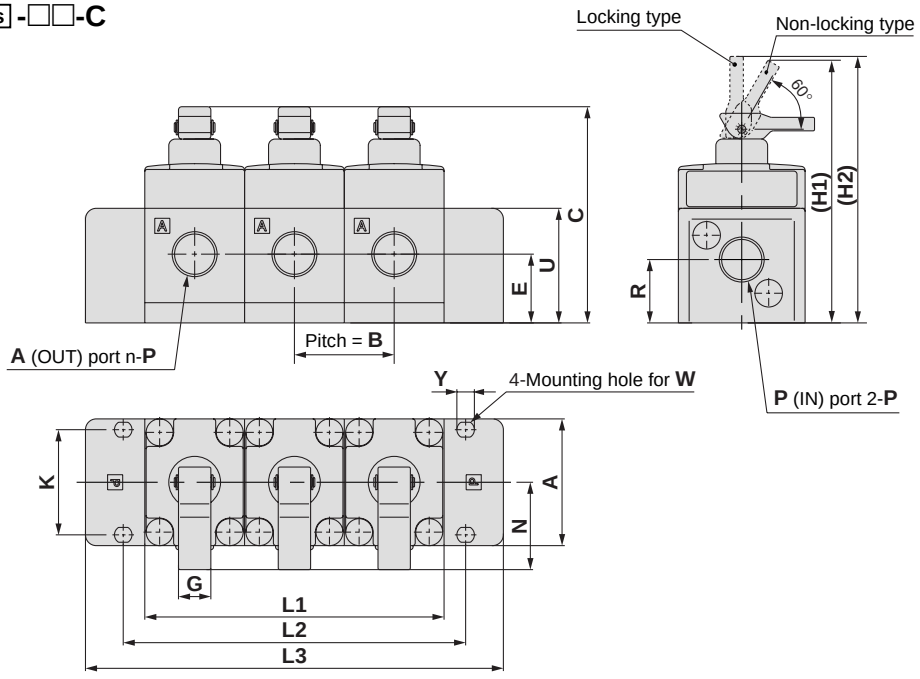

Dimensions

(mm)

Model	A	B	C	E	G	H1	H2	K	N	P	R	U	W	Y
LLH2A	50	31	65	20.5	10	85.5	87	18	27	Rc1/4, NPT1/4	19	34	M4	5.5
LLH3A	47	37	90	25.5	19	112.5	114.5	39	37	Rc3/8, NPT3/8	23.5	42.5	M5	6.5
LLH4A	60	47	107	29	20.5	146	150	50	50	Rc1/2, NPT1/2	24	48	M6	7.5

(mm)

Model	Station / Symbol	2	3	4	5
LLH2A	**L1**	62	93	124	155
	L2	75	106	137	168
	L3	118	149	180	211
LLH3A	**L1**	74	111	148	185
	L2	90	127	164	201
	L3	118	155	192	229
LLH4A	**L1**	94	141	188	235
	L2	112	159	206	253
	L3	144	191	238	285

Fittings and Special Tools

Fittings

Changing tubing sizes

The tubing size can be changed within the same body class (body size) by replacing the nut and insert bushing.

Body class	Tubing O.D.														
	Metric sizes							Inch sizes							
	4	6	8	10	12	19	25	1/8	3/16	1/4	3/8	1/2	3/4	1
2	●	○	—	—	—	—	—	●	●	○	—	—	—	—
3	—	●	●	○	—	—	—	—	—	●	○	—	—	—
4	—	—	—	●	○	—	—	—	—	—	●	○	—	—
5	—	—	—	—	●	○	—	—	—	—	—	●	○	—
6	—	—	—	—	—	●	○	—	—	—	—	—	●	○

Part composition

	Component parts		
	Nut	Insert	Collar (insert assembly)
○ Basic size	Yes	Yes	No
● Reducer type	Yes	Yes	Yes

Changing the tubing size

Example) Changing the tubing from an O.D. 1/4" to O.D. 1/8" in body class 2.

Prepare an insert bushing and nut for 1/8" O.D. tubing (LQ-2U03) and change the tubing size.
(Refer to the section on how to order fitting parts.)

Note) Tubing is sold separately.

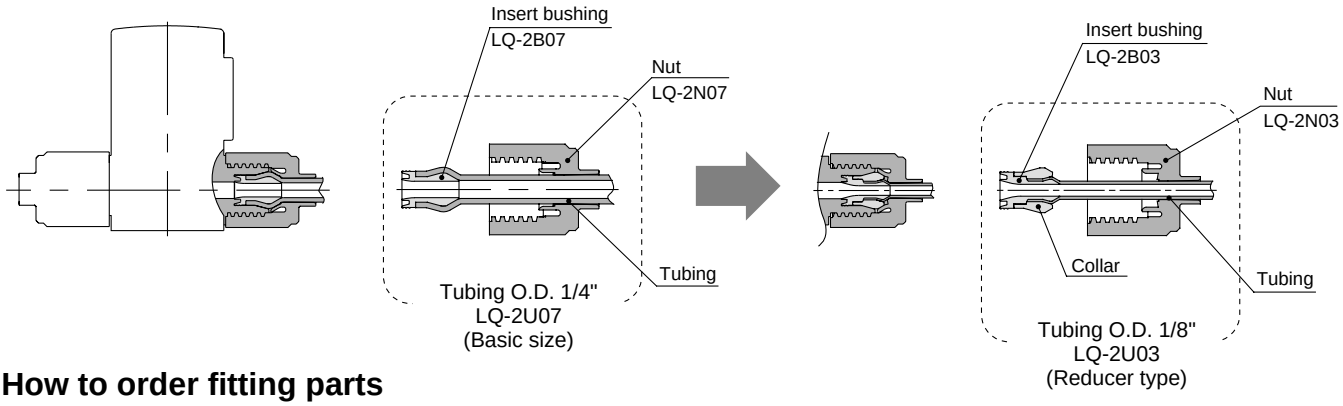

How to order fitting parts

LQ □ – 2 U 03

∗ Type U is recommended when changing tubing sizes.

Type of fitting

Symbol	Applicable fitting
Nil	LQ2
1	LQ1

Body class

Symbol	Body class	Applicable fitting
2	2	LQ2
3	3	
4	4	
5	5	
6	6	LQ1

Type of part

Symbol	Type of part
U	Insert bushing & nut
B	Insert bushing
N	Nut

Tubing size

Symbol	Tubing O.D.	Body class	Applicable fitting
03	1/8"	2	LQ2
04	ø4		
05	3/16"		
06	ø6		
07	1/4"		
06	ø6	3	
08	ø8		
10	ø10		
07	1/4"		
11	3/8"		
10	ø10	4	
12	ø12		
11	3/8"		
13	1/2"		
12	ø12	5	
13	1/2"		
19	3/4", ø19		
19	3/4", ø19	6	LQ1
25	1", ø25		

Special Tools

How to order fitting jigs

LQ − G J □ − □ − □

Insert pin material

Nil	Resin
S	Stainless steel (J/K type ony)

Insert pin/Holder type

Nil	Metric size
N	Inch size

Note 1) Compatible pins and holders are included with all sizes. (with the parts case)

Option (L/M type only)

Symbol	Option
Nil	None
B	With bracket

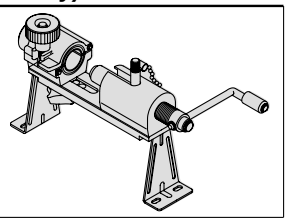

Type

Symbol	Body class		
J / K	1, 2	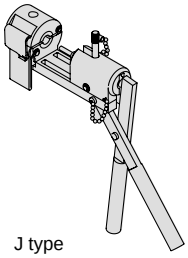 J type	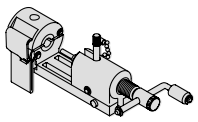 K type
L / M	1, 2, 3, 4, 5, 6	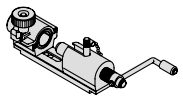 L type	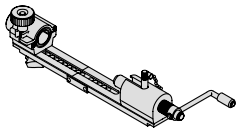 M type (for short piping)

Option

Description		Part No.
Bracket assembly	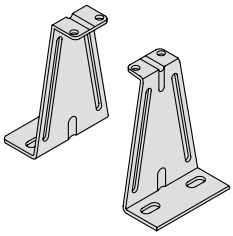	LQ-GBL

Table 1 Tubing size symbols

Type	Body Class	Tubing O.D.													
		Metric sizes								Inch sizes					
		ø3	ø4	ø6	ø8	ø10	ø12	ø19	ø25	1/8"	3/16"	1/4"	3/8"	1/2"	3/4"	1"
J	1	03	04	—	—	—	—	—	—	03	—	—	—	—	—	—
	2	—	04	06	—	—	—	—	—	03	05	07	—	—	—	—
L	1	03	04	—	—	—	—	—	—	03	—	—	—	—	—	—
	2	—	04	06	—	—	—	—	—	03	05	07	—	—	—	—
	3	—	—	06	08	10	—	—	—	—	—	07	11	—	—	—
	4	—	—	—	—	10	12	—	—	—	—	—	11	13	—	—
	5	—	—	—	—	—	12	19	—	—	—	—	—	13	19	—
	6	—	—	—	—	—	—	19	25	—	—	—	—	—	19	25

Replacement parts

Description		Part No.
Insert pin holder assembly (with the parts case)	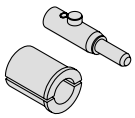	**LQ-GP J □ - □** Type: J Insert pin material (J/K type only): Nil = Resin; S = Stainless steel Insert pin/Holder type: Nil = Metric sizes; N = Inch sizes
Insert pin (single)		**LQ-GP 2 J □ - 07** Body class (Refer to Table 1): 2 Type: J Insert pin material (J/K type only): Nil = Resin; S = Stainless steel Tubing size symbol (Refer to Table 1): 07
Holder (single)		**LQ-GH J - 07** Type: J Tubing size symbol (Refer to Table 1): 07

Note1) Replacement part type J shows the parts for LQ-GJ and LQ-GK.
Replacement part type L shows the parts for LQ-GL and LQ-GM.

Special Tools

Dimensions

LQ-GJ

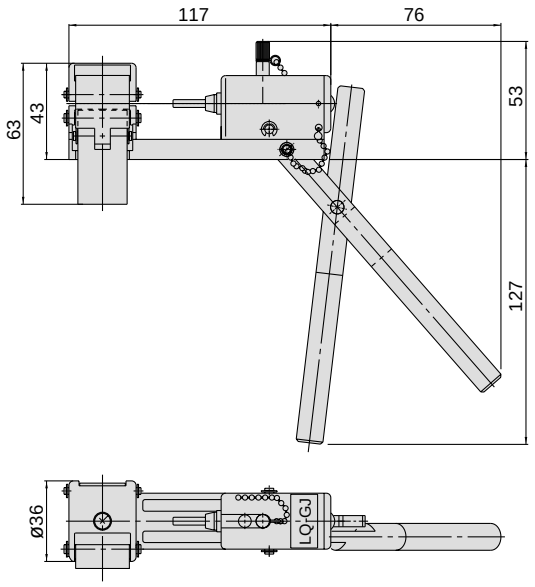

LQ-GK

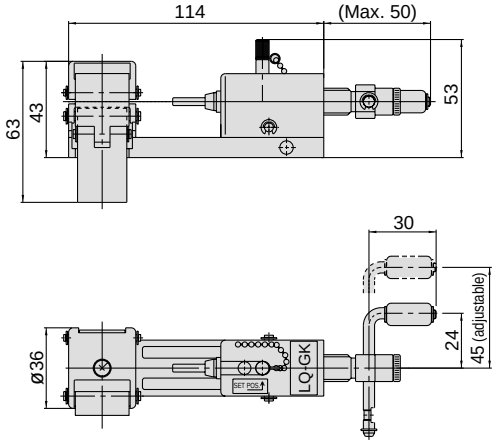

LQ-GM

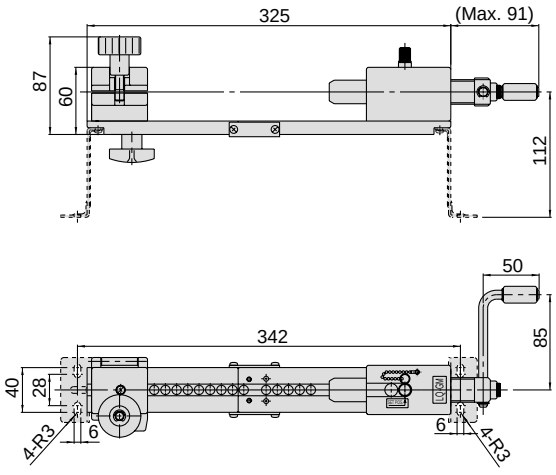

LQ-GL

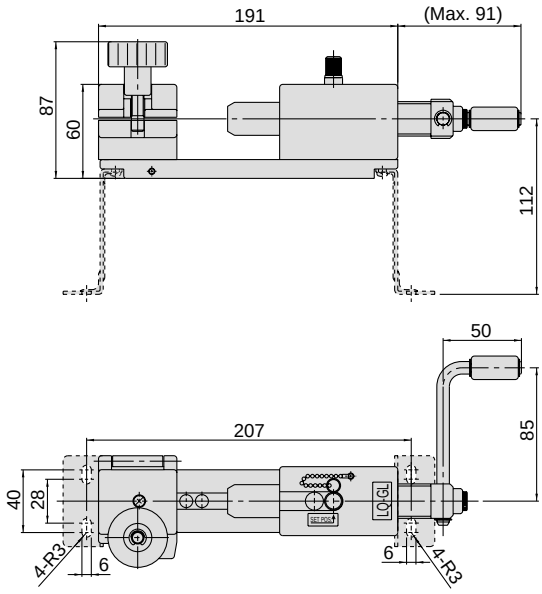

Fitting Assembly Procedure

Assemble fittings following the procedure shown below.

J type

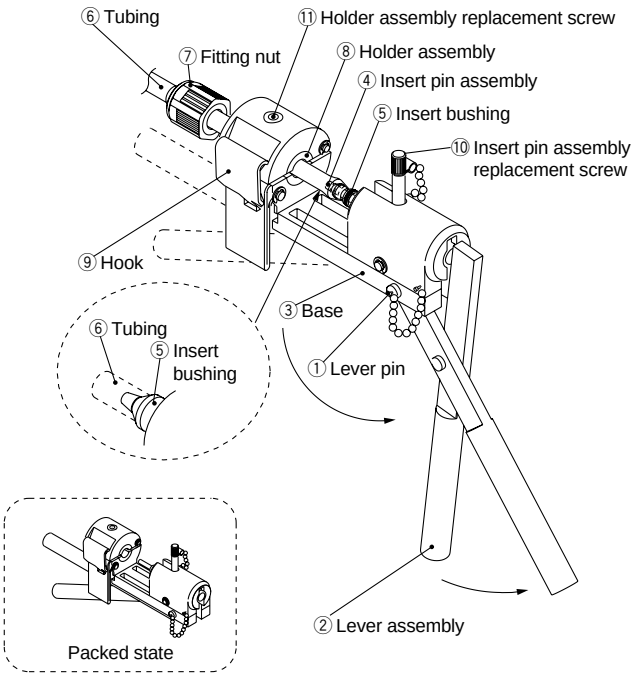

K type

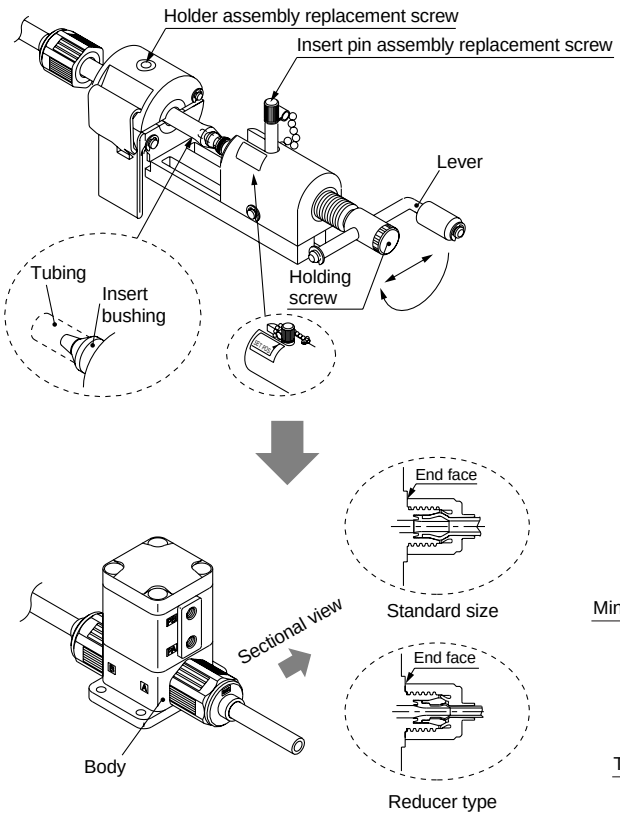

J type fitting assembly procedure

1. Pull out the lever **pin** ①. Rotate the **lever assembly** ② to align the holes on the **lever assembly** ② and the **base** ③. Insert the **lever pin** ① into the holes to fix the **lever assembly** ②.
2. Place the **insert bushing** ⑤ on the **insert pin assembly** ④.
3. Cut the end of the **tubing** ⑥ at a right angle and pass it through the **fitting nut** ⑦. After placing the **tubing** ⑥ in the **holder assembly** ⑧, push it onto the **insert bushing** ⑤ until it stops and clamp it with the **hook** ⑨.

   ⚠ Caution
   - **When the tubing ⑥ is curved, straighten it out before using it.**
   - **The tubing ⑥ may slip if there is oil or dust, etc., on the holder assembly ⑧. Remove the contamination using alcohol or another suitable cleaner.**
4. Press the **insert bushing** ⑤ into the **tubing** ⑥ by turning the **lever assembly** ②.
5. To replace the **insert pin assembly** ④ and **holder assembly** ⑧, use the **insert pin assembly replacement screw** ⑩ and the **holder assembly replacement screws** ⑪, respectively.

K type fitting assembly procedure

- For procedure to set and press fit the insert pin assembly, refer to L, M type fitting assembly procedures.
- For procedure to set the tubing, refer to J type procedure.

1 → 5 Refer to J type assembly procedure.

6. Tighten the **fitting nut** ⑦ until it reaches the prescribed position on the body (end face). As a guide, refer to the proper tightening torques shown below.

Nut tightening torque for piping

Body class	Torque (Nm)	
	LQ1	LQ2
2	0.3 to 0.4	1.5 to 2.0

Note 1) In case of body class 1, the nut should be tightened manually.

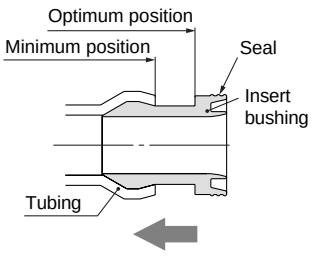

⚠ Precautions on installation

- **Be careful not to scratch or dent the seal of the insert bushing. (Refer to the illustration on the left.)**
- **When the insert bushing inserted, its tubing end should be closer to seal side than the minimum position. (Refer to the illustration on the left.)**

Fitting Assembly Procedure

Assemble fittings following the procedure shown below.

L type

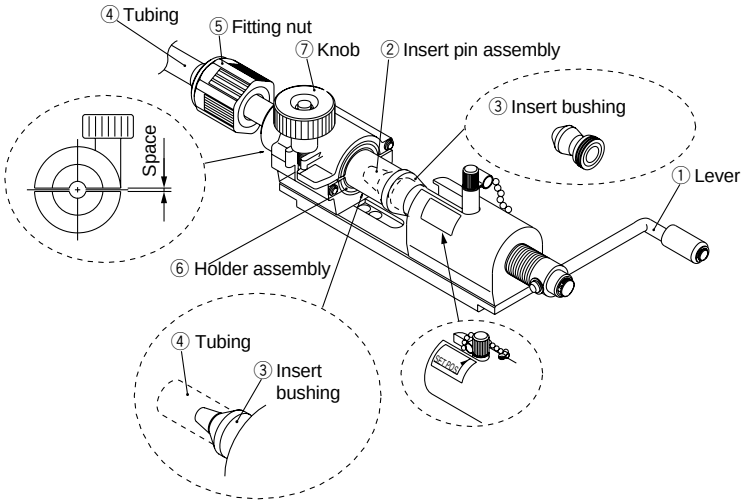

M type

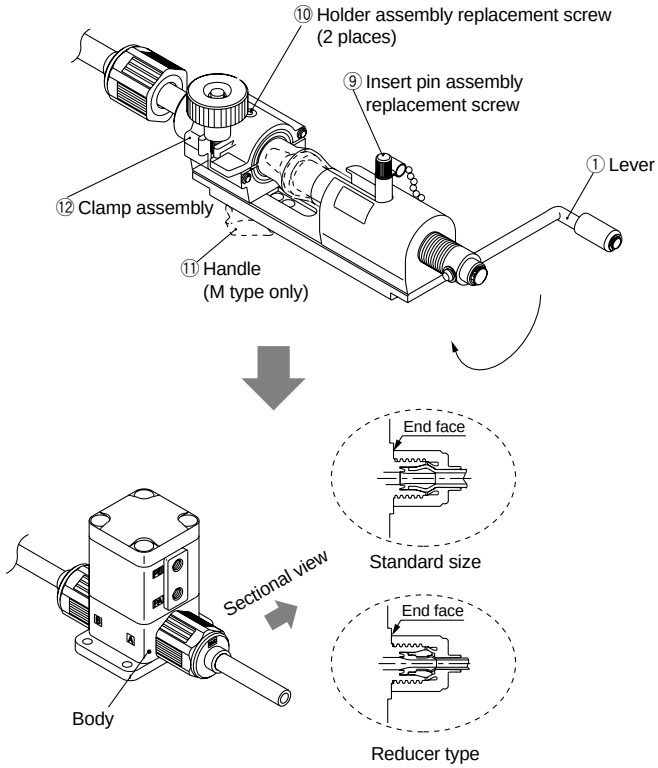

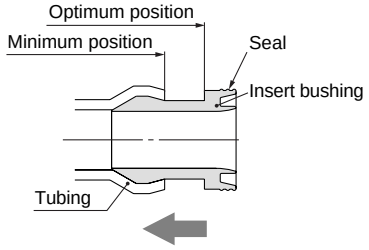

L and M type fitting assembly procedure

1. Turn the **lever** ① and move to SET POS.
2. Place the **insert bushing** ③ on the **insert pin assembly** ②.
3. Cut the end of the **tubing** ④ at a right angle and pass it through the **fitting nut** ⑤.
   After placing the **tubing** ④ in the **holder assembly** ⑥, push it onto the **insert bushing** ③ until it stops and clamp it with the **knob** ⑦.
   When tightening the **tubing** ④ with the **knob** ⑦, maintain a uniform gap on both sides of the holder.

   ⚠Caution
   - **When the tubing ④ is curved, straighten it out before using it.**
   - **The tubing ④ may slip if there is oil or dust, etc. on the holder assembly ⑥. Remove the contamination using alcohol or another suitable cleaner.**
4. Press the **insert bushing** ③ into the **tubing** ④ by turning the **lever** ①. (Pressing in can be accomplished with 2 or 3 turns of the **lever** ①.)
5. To replace the **insert pin assembly** ② and **holder assembly** ⑥, use the **insert pin assembly replacement screw** ⑨ and the **holder assembly replacement screws** ⑩, respectively.
6. In case of M type for short piping, remove the **handle** ⑪, slide the **clamp assembly** ⑫ to attain the specified length, then secure it again with the **handle** ⑪.
7. Tighten the **fitting nut** ⑤ to the prescribed position on the body (end face).
   As a guide, refer to the proper tightening torques shown below.

Nut tightening torque for piping

Body class	Torque (Nm)	
	LQ1	LQ2
2	0.3 to 0.4	1.5 to 2.0
3	0.8 to 1.0	3.0 to 3.5
4	1.0 to 1.2	7.5 to 9
5	2.5 to 3.0	11 to 13
6	5.5 to 6.0	—

Note 1) In case of body class 1, the nut should be tightened manually.

⚠Precautions on installation

- **Be careful not to scratch or dent the seal of the insert bushing. (Refer to the illustration on the left.)**
- **When the insert bushing inserted, its tubing end should be closer to seal side than the minimum position. (Refer to the illustration on the left.)**

Applicable Fluids

Material and fluid compatibility check list for air and manually operated high purity valves

Chemical	Body material			Diaphragm material		
	Stainless steel SUS316	Fluoro resin PFA	Polyphenylene sulfide resin PPS	Fluoro resin PTFE	Nitrile rubber NBR	Ethylene propylene rubber EPR
Acetone	○	○ Note 1)	○ Note 1)	○ Note 2)	×	×
Ammonium hydroxide	○	○	○	○ Note 2)	×	×
Isobutyl alcohol	○	○ Note 1)	○ Note 1)	○ Note 2)	○	○
Isopropyl alcohol	○	○ Note 1)	○ Note 1)	○ Note 2)	○	○
Hydrochloric acid	×	○	○	○	×	×
Ozone (dry)	○	○	○	○	×	○
Hydrogen peroxide Concentration 5% or less, 50°C or less	×	○	○	○	×	×
Ethyl acetate	○	○ Note 1)	○ Note 1)	○ Note 2)	×	×
Butyl acetate	○	○ Note 1)	○ Note 1)	○ Note 2)	×	×
Nitric acid (except fuming nitric acid) Concentration 10% or less	×	○	○	○ Note 2)	×	×
DI water	○	○	○	○	×	○
Sodium hydroxide Concentration 50% or less	○	○	○	○	×	×
Nitrogen gas	○	○	○	○	○	○
Super pure water	×	○	○	○	×	×
Toluene	○	○ Note 1)	○ Note 1)	○ Note 2)	×	×
Hydrofluoric acid	×	○	×	○ Note 2)	×	×
Sulfuric acid (except fuming sulfuric acid)	×	○	×	○ Note 2)	×	×
Phosphoric acid Concentration 80% or less	×	○	×	○	×	×

The material and fluid compatibility check list provides reference values as a guide only.
Note 1) Use a stainless steel body, as static electricity may be generated.
Note 2) Use caution as permeation may occur and any permeated fluid could effect other material parts.

Table symbols
○: Can be used
○: Can be used in certain conditions
×: Cannot be used

- Compatibility is indicated for fluid temperatures of 100°C or less.
- The material and fluid compatibility check list provides reference values as a guide only, therefore we do not guarantee the application to our product.
- The data above is based on the information presented by the material manufacturers.
- SMC is not responsible for its accuracy and any damage happened because of this data.

Series LV
Safety Instructions

These safety instructions are intended to prevent a hazardous situation and/or equipment damage. These instructions indicate the level of potential hazard by labels of **"Caution", "Warning"** or **"Danger"**. To ensure safety, be sure to observe ISO 4414 Note 1), JIS B 8370 Note 2) and other safety practices.

⚠ Caution : Operator error could result in injury or equipment damage.

⚠ Warning : Operator error could result in serious injury or loss of life.

⚠ Danger : In extreme conditions, there is a possible result of serious injury or loss of life.

Note 1) ISO 4414: Pneumatic fluid power --General rules relating to systems
Note 2) JIS B 8370 : Pneumatic system axiom.

⚠ Warning

1. **The compatibility of equipment is the responsibility of the person who designs the system or decides its specifications.**
   Since the products specified here are used in various operating conditions, their compatibility for the specific system must be based on specifications or after analysis and/or tests to meet your specific requirements. The expected performance and safety assurance will be the responsibility of the person who has determined the compatibility of the system. This person should continuously review the suitability of all items specified. Referring to the latest catalogue information with a view to giving due consideration to any possibility of equipment failure when configuring a system.
2. **Only trained personnel should operate machinery and equipment.**
   Assembly, handling or repair of machinery and equipment should be performed by trained and experienced operators.
3. **Do not service machinery/equipment or attempt to remove components until safety is confirmed.**
4. **To promote safe operation, be sure to observe company standards and legal regulations, etc.**
   Refer to ISO4414, JIS B 8370 (pneumatic system axiom), labor health and safety laws and other safety regulations.

Series LV
High Purity Chemical Valve Precautions 1
Be sure to read before handling.

Design & Selection

⚠Warning

1. Confirm the specifications.
Give careful consideration to operating conditions such as the application, fluid and environment, and use within the operating ranges specified in this catalogue.

2. Fluids
Operate after confirming the compatibility of the product's component materials with fluids, using the check list on features page 34. Contact SMC regarding fluids other than those in the check list.

Operate within the indicated fluid temperature range.

3. Maintenance space
Ensure the necessary space for maintenance and inspections.

4. Fluid pressure range
Keep the supplied fluid pressure within the operating pressure range shown in the catalogue.

5. Ambient environment
Operate within the ambient operating temperature range. After confirming the compatibility of the product's component materials with the ambient environment, operate so that fluid does not adhere to the product's exterior surfaces.

6. Liquid seals
When circulating fluid

Provide a relief valve in the system so that fluid does not get into the liquid seal circuit.

7. Countermeasures for static electricity
Since static electricity may be generated depending on the fluid being used, implement suitable countermeasures.

Mounting

⚠Warning

1. If air leakage increases or equipment does not operate properly, stop operation.
After mounting, perform suitable function and leak tests to confirm that the mounting is correct.

2. Instruction manual
Mount and operate the product after reading the manual carefully and understanding its contents. Also keep the manual where it can be referred to as necessary.

Piping

⚠Caution

1. Preparation before piping
Before piping is connected, it should be thoroughly blown out with air (flushing) or washed to remove chips, cutting oil and other debris from inside the pipe.

Install piping so that it does not apply pulling, pressing, bending or other forces on the valve body.

2. Use the tightening torques shown below when making connections to the pilot port.
Operating port tightening torque

Operating port	Torque (Nm)
M5	1/6 turn with a tightening tool after first tightening by hand
Rc, NPT 1/8	0.8 to 1.0

3. Use of metal fittings
Do not use metal fittings for piping on taper threads made of resin, as this may cause damage to the threads.

LVA PPS body ported tightening torque for fittings.

Size	Breaking torque	Tightening torque (Nm)	Guideline for tightening torque (Number of turns)
LVA20	2 to 3	0.5 to 1	2 to 3 turns
LVA30	6 to 8	2 to 3	3 to 4 turns
LVA40	11 to 14	5 to 7	3 to 4 turns
LVA50	18 to 20	8 to 10	3 to 4 turns

∗ Guideline for tightening torque
Number of turns when the fitting is screwed into the body with 2 to 3 windings of sealant tape applied to threaded portion of the piping.
The value may differ for types other than sealant type.

4. Use pilot ports and sensor (breathing) ports as indicated below.

	PA Port	PB Port	Sensor (breathing) port
N.C.	Pressure	Breathing	Breathing
N.O.	Breathing	Pressure	Breathing
Double acting	Pressure	Pressure	Breathing

In the case of N.C. and N.O. types, the port which does not receive operating pressure is released to atmosphere. When intake and exhaust directly from the valve is not desired due to problems with the ambient environment or scattering of dust, etc., install piping and perform intake and exhaust at a location which does not present a problem.

5. See page 32 regarding tubing connections.

Operating Air Supply

⚠Warning

1. Use clean air.
Do not use compressed air which includes chemicals, synthetic oils containing organic solvents, salt, or corrosive gases, etc., as this may cause damage or malfunction.

Series LV
High Purity Chemical Valve Precautions 2

Be sure to read before handling.

Operating Environment

⚠Warning

1. **Do not use in a location having an explosive atmosphere.**
2. **Do not operate in locations where vibration or impact occurs.**
3. **Do not use in locations where radiated heat will be received from nearby heat sources.**

Maintenance

⚠Warning

1. **Maintenance should be performed in accordance with the procedures in the instruction manual.**

   Incorrect handling can cause damage or malfunction of machinery and equipment, etc.

2. **Before removing equipment or compressed air supply/exhaust devices, shut off the air and power supplies, and exhaust compressed air from the system.**

   Further, when restarting equipment after remounting or replacement, first confirm safety and then check the equipment for normal operation.

3. **Perform work after removing residual chemicals and carefully replacing them with DI water or air, etc.**
4. **Do not disassemble the product. Products which have been disassembled cannot be guaranteed.**

   If disassembly is necessary, contact SMC.

5. **In order to obtain optimum performance from valves, perform periodic inspections to confirm that there are no leaks from valves or fittings, etc.**

⚠Caution

1. **Removal of drainage**

   Flush drainage from filters regularly.

Precautions on Usage

⚠Warning

1. **Operate within the ranges of the maximum operating pressure and back pressure.**

⚠Caution

1. **When the diaphragm is made of PTFE**

   Please note that when the product is shipped from the factory, gases such as N_2 and air may leak from the valve at a rate of $1cm^3$/min (when pressurized).

2. **When operated at a very low flow rate, the series LV□ with flow rate adjustment may vibrate, etc. depending on the operating conditions. Therefore, operate it after careful examination of the flow rate, pressure and piping conditions.**
3. **In the series LV□, water hammering may occur depending on the fluid pressure conditions. In most cases, improvement is possible by adjusting the pilot pressure with a speed controller, etc., but the flow rate, pressure and piping conditions should be reviewed.**
4. **To adjust the flow rate for the series LV□ with flow rate adjustment, open gradually starting from the fully closed condition.**
   Opening is accomplished by turning the adjustment knob counter clockwise. Additionally, do not apply any unreasonable force to the adjustment handle when nearing a fully opened or closed state. This may result in deformation of the orifice sheet surface or damage to the threaded part of the adjustment handle. It is in the fully closed condition when the product is shipped from the factory.
5. **After a long period of nonuse, perform a test run before beginning regular operation.**
6. **Since the LVC is packaged in a clean room use sufficient care in handling when opened.**
7. **Take extra care when setting the operating direction and when handling the lever of series LVH.**

EUROPEAN SUBSIDIARIES:

Austria
SMC Pneumatik GmbH (Austria).
Girakstrasse 8, A-2100 Korneuburg
Phone: +43 2262-62280, Fax: +43 2262-62285
E-mail: office@smc.at
http://www.smc.at

Belgium
SMC Pneumatics N.V./S.A.
Nijverheidsstraat 20, B-2160 Wommelgem
Phone: 03-355-1464, Fax: 03-355-1466
E-mail: post@smcpneumatics.be

Bulgaria
SMC Industrial Automation Bulgaria EOOD
16 kliment Ohridski Blvd., fl.13 BG-1517 Sofia
Phone:+359 2 9744492, Fax:+359 2 9744519
E-mail: office@smc.bg
http://www.smc.bg

Czech Republic
SMC Industrial Automation CZ s.r.o.
Hudcova 78a, CZ-61200 Brno
Phone: +420 5 414 24611, Fax: +420 5 412 18034
E-mail: office@smc.cz
http://www.smc.cz

Denmark
SMC Pneumatik A/S
Knudsminde 4B, DK-8300 Odder
Phone: (45)70252900, Fax: (45)70252901
E-mail: smc@smc-pneumatik.dk

Estonia
SMC Pneumatics Estonia OÜ
Laki 12-101, 106 21 Tallinn
Phone: 06 593540, Fax: 06 593541
http://www.smcpneumatics.ee

Finland
SMC Pneumatics Finland OY
PL72, Tiistinniityntie 4, SF-02031 ESPOO
Phone: 09-859 580, Fax: 09-8595 8595
http://www.smcfitec.sci.fi

France
SMC Pneumatique, S.A.
1, Boulevard de Strasbourg, Parc Gustave Eiffel
Bussy Saint Georges
F-77607 Marne La Vallee Cedex 3
Phone: 01-6476 1000, Fax: 01-6476 1010
http://www.smc-france.fr

Germany
SMC Pneumatik GmbH
Boschring 13-15, D-63329 Egelsbach
Phone: 06103-4020, Fax: 06103-402139
E-mail: info@smc-pneumatik.de
http://www.smc-pneumatik.de

Greece
S. Parianopoulus S.A.
7, Konstantinoupoleos Street,
GR-11855 Athens
Phone: 01-3426076, Fax: 01-3455578

Hungary
SMC Hungary Ipari Automatizálási Kft.
Budafoki ut 107-113, H-1117 Budapest
Phone: +36 1 371 1343, Fax: +36 1 371 1344
E-mail: office@smc-automation.hu
http://www.smc-automation.hu

Ireland
SMC Pneumatics (Ireland) Ltd.
2002 Citywest Business Campus,
Naas Road, Saggart, Co. Dublin
Phone: 01-403 9000, Fax: 01-464-0500

Italy
SMC Italia S.p.A
Via Garibaldi 62, I-20061Carugate, (Milano)
Phone: 02-92711, Fax: 02-9271365
E-mail: mailbox@smcitalia.it
http://www.smcitalia.it

Latvia
SMC Pneumatics Latvia SIA
Smerla 1-705, Riga LV-1006, Latvia
Phone: 0777-94-74, Fax: 0777-94-75
http://www.smclv.lv

Lithuania
UAB Ottensten Lietuva
Savanoriu pr. 180, LT-2600 Vilnius, Lithuania
Phone/Fax: 370-2651602

Netherlands
SMC Pneumatics BV
De Ruyterkade 120, NL-1011 AB Amsterdam
Phone: 020-5318888, Fax: 020-5318880
E-mail: info@smcpneumatics.nl

Norway
SMC Pneumatics Norway A/S
Vollsveien 13 C, Granfos Næringspark
N-1366 Lysaker
Tel: (47) 67 12 90 20, Fax: (47) 67 12 90 21
http://www.smc-norge.no

Poland
SMC Industrial Automation Polska Sp.z.o.o.
ul. Konstruktorska 11A, PL-02-673 Warszawa,
Phone: +48 22 548 5085, Fax: +48 22 548 5087
E-mail: office@smc.pl
http://www.smc.pl

Portugal
SMC Sucursal Portugal, S.A.
Rua de Engº Ferreira Dias 452, 4100-246 Porto
Phone: 22-610-89-22, Fax: 22-610-89-36
E-mail: postpt@smc.smces.es

Romania
SMC Romania srl
Str Frunzei 29, Sector 2, Bucharest
Phone: 01-324-2626, Fax: 01-324-2627
E-mail: smccadm@canad.ro
http://www.smcromania.ro

Russia
SMC Pneumatik LLC.
36/40 Sredny pr. St. Petersburg 199004
Phone.:(812) 118 5445, Fax:(812) 118 5449
E-mail: smcfa@peterlink.ru
http://www.smc-pneumatik.ru

Slovakia
SMC Priemyselná Automatizáciá, s.r.o.
Námestie Martina Benku 10
SK-81107 Bratislava
Phone: +421 2 444 56725, Fax: +421 2 444 56028
E-mail: office@smc.sk
http://www.smc.sk

Slovenia
SMC industrijska Avtomatika d.o.o.
Grajski trg 15, SLO-8360 Zuzemberk
Phone: +386 738 85240 Fax: +386 738 85249
E-mail: office@smc-ind-avtom.si
http://www.smc-ind-avtom.si

Spain
SMC España, S.A.
Zuazobidea 14
01015 Vitoria
Phone: 945-184 100, Fax: 945-184 124
E-mail: post@smc.smces.es

Sweden
SMC Pneumatics Sweden AB
Ekhagsvägen 29-31, S-141 71 Huddinge
Phone: 08-603 12 00, Fax: 08-603 12 90
http://www.smc.nu

Switzerland
SMC Pneumatik AG
Dorfstrasse 7, CH-8484 Weisslingen
Phone: 052-396-3131, Fax: 052-396-3191
E-mail: info@smc.ch
http://www.smc.ch

Turkey
Entek Pnömatik San. ve Tic Ltd. Sti.
Perpa Tic. Merkezi Kat: 11 No: 1625,
TR-80270 Okmeydani Istanbul
Phone: 0212-221-1512, Fax: 0212-221-1519
http://www.entek.com.tr

UK
SMC Pneumatics (UK) Ltd
Vincent Avenue, Crownhill,
Milton Keynes, MK8 0AN
Phone: 0800 1382930 Fax: 01908-555064
E-mail: sales@smcpneumatics.co.uk
http://www.smcpneumatics.co.uk

OTHER SUBSIDIARIES WORLDWIDE:

ARGENTINA, AUSTRALIA, BOLIVIA, BRASIL, CANADA, CHILE, CHINA, HONG KONG, INDIA, MALAYSIA, MEXICO, NEW ZEALAND, PHILIPPINES, SINGAPORE, SOUTH KOREA, TAIWAN, THAILAND, USA, VENEZUELA

http://www.smceu.com
http://www.smcworld.com

SMC CORPORATION 1-16-4 Shimbashi, Minato-ku, Tokio 105 JAPAN; Phone:03-3502-2740 Fax:03-3508-2480

Produced and printed by SMC European Marketing Centre 7/04

Specifications are subject to change without prior notice and any obligation on the part of the manufacturer.